the wing itsstrength.

A. NONCANTILEVER WING WITH EXTERNAL SUPPORTS.

B. CANTILEVER WING WITH NO EXTERNAL SUPPORTS.

Fig. 3.49: Non-cantilever and cantilever wingconfigurations

Truss-type Wing Construction

Fabric-covered aeroplane wings have a truss-type structure that has changed very little throughout the evolution of the aeroplane. The main lengthwise members in a wing truss arethe spars. In the past, these were all made of wood, but the more modem construction uses spars of extruded aluminium alloy.

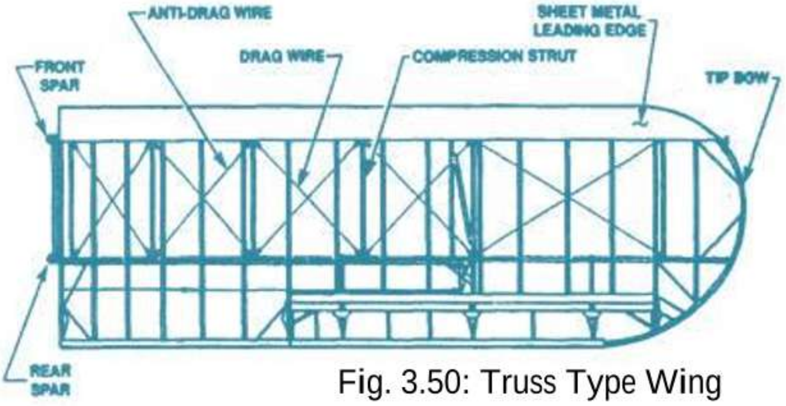

Fig. 3.50: Truss Type Wing

Stressed-Skin Wing Construction

In the same manner as the fuselage, wings have generally evolved from the truss form of construction to one in which the outer skin carries the greatest amount of the stresses. Semi- monocoque construction is generally used for the main portion of thewing.

One of the advantages of an all-metal wing is the ease with which it can be built to carry all of the flight loads within the structureso it does not need any external struts or braces. Such an internally braced wing is called a cantileverwing.This configuration has become standard for transportaircraft, cantilever low wing, with retractable landing gear. The aerofoil section of a cantilever wing is normally carries the stresses. Semi- monocoque construction is generally used for the main portion of the wing is quite thick, and the wing has a strong centre section built into the fuselage. The engines and landing gear attach to this centre section. Rather than using the familiar two-spar construction, most of these wings are of the multi-spar construction in which several spars carry the flight loads, and spanwise stiffeners run between the spars to provide even greater strength.

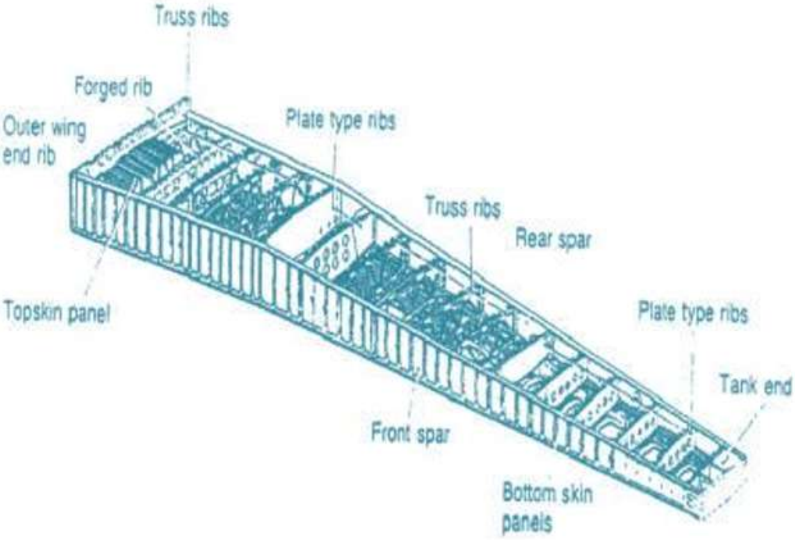

Fig. 3.51: Semi-monocoque wing construction

Wing Torsion Box

It is critical that a wing can resist twisting forces, produced especially by the deflection of ailerons and the deployment of flaps and slats and changes in angle of attack. Such twisting would change the flight characteristics of the aircraft, and in extreme circumstances, usually at high speed can cause aileron reversal (a deflection of the aileron causes the wing to twist in the opposite aerodynamic sense, creating lift changes in opposition to that intended by the pilot).

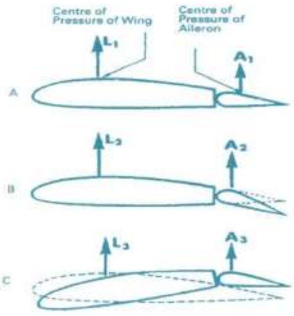

Fig. 3.52: Aileron reversal stages

This can also occur when an aileron goes intodynamic „flutter“ and can lead to „structural divergence“and catastrophic failure of the wing. Consequently, most modern airliner wings consist of a 'torsion box“ (or 'wing box“) made up from the front and rear spars,andcapped by the upper and lowerskins.

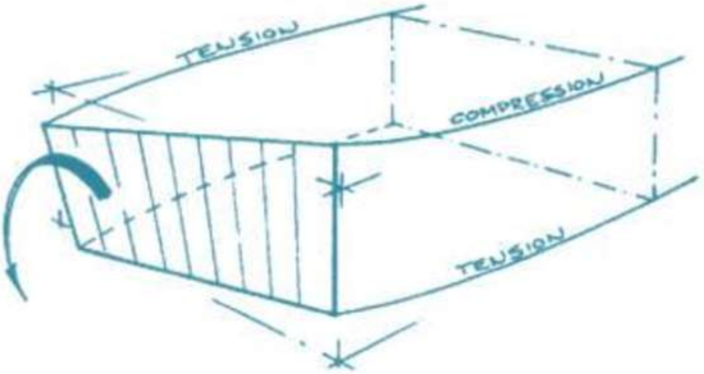

Fig. 3.53: Torsion box principle

The four components of this structure are primary structure. Other wing features such as leading edges and trailing edges and their associated devices, are secondary structure,and often made from a composite materialconstruction.

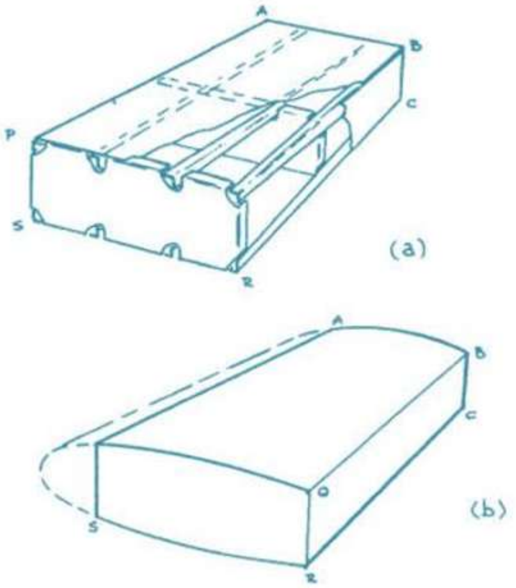

Fig. 3.54: Torsion box wing structure

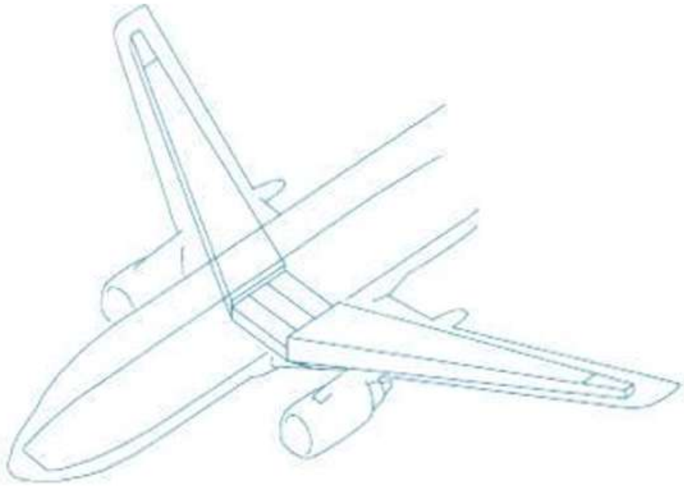

Fig. 3.55: Torsion box takes the primary wingloads

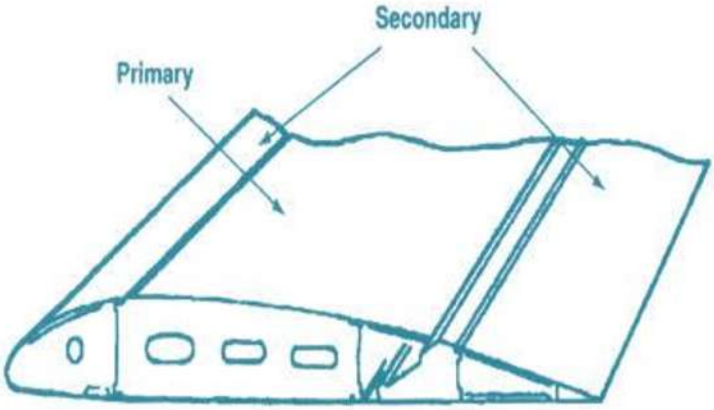

Fig. 3.56: Torsion box is primary structure

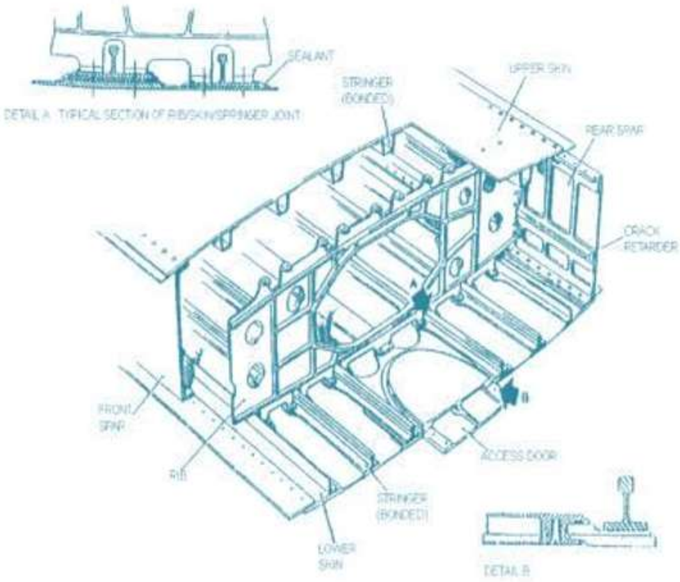

Fig. 3.57: Torsion box wing structure

Wing Spars

The spars are the principle structural members of the wing. The spars support all distributed loads as well as concentrated weights, such as fuselage, landing gear, and on multi-enginedaircraft, the nacelles orpylons.

Most spars are built up from extruded 7075 aluminium alloy sections, with riveted aluminium alloy web sections to provide extra strength. More recent aircraft have machined spars.

Spars usually taper from root to tip, because there is a greater amount of bending moment experienced towards the root whenever the wing bends.

Wing Spar Layout Configurations

Most manufacturers use a similar spar layout construction as shown in Figure 3.60.

Some use a third (middle spar), sometimes called an auxiliary spar, to help carry the extra bending moments at the root and the engine and landing gear loads.

Loads on the Wing Spar

A wing spar is subject to two loads;shear force and bending moment.

The loads applied to a wing in flight and during landing are complex, butcan be simplified to a lift load during flight, decreasing from root to tip due to the decreasing wing section and sometimes a twist is applied to the wing also (washout). This results in a decreasing shear force and bending moment as shown in Figure 3.59. For both load types, the maximum is at the wingroot.

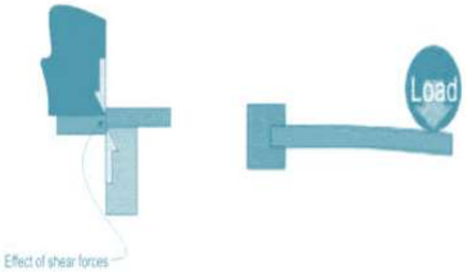

Fig. 3.58: Effects of shear force loads and bending moment

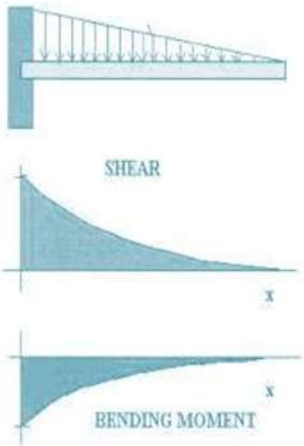

Fig. 3.59: Shear force and bending moment diagrams for a cantilever beam with a reducing distributed load.

The inclusion of fuel tanks, wing mounted engines and wing mounting landing gear will modify the diagrams considerably, with all those factors actually providing shear force and bending moment relief at the wing root during flight, butwill aggravate the root loads on landing. Final aircraft design configuration is a compromise as aresult.

Separating the wing tanks into multiple compartments will increase the bending moment relief even further as shown in Figure 3.61.

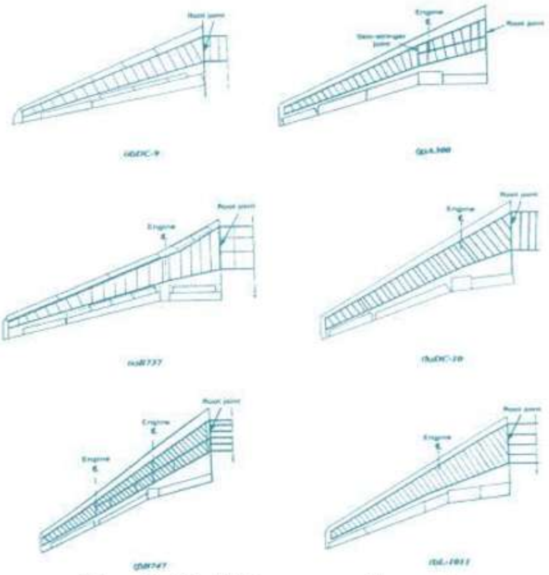

Fig. 3.60: Wing spar layouts

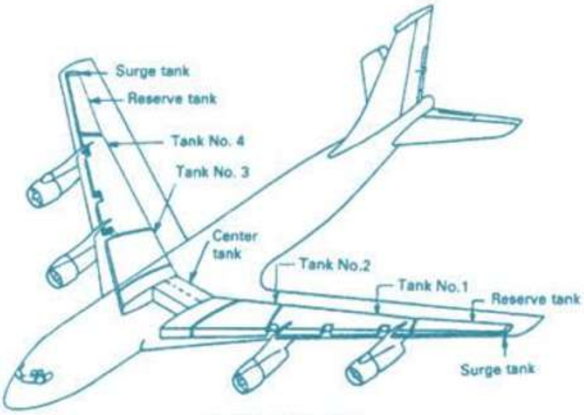

(a)Fuel tank installation

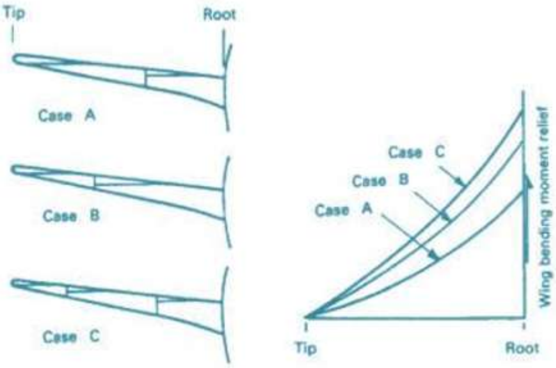

Fig. 3.61: Effects wing tanks on bending momentrelief

When a wing flexes upwards (known as 'sagging" due to theshape made when both wings are viewed from the front) the top surface goes into compression and the bottom surface goes into compression. The two surfaces also compress together, a load which must be withstood by the wing ribs. The positions of the tensile and compressive loads are reversed when the moment the aircraft is touching down on landing and also duringtaxiing.

Approximately halfway between the upper and lower surface of the wing (known as the 'neutral axis), the structure is under no bending induced loads whatsoever. The only load taken at that point is shear load.

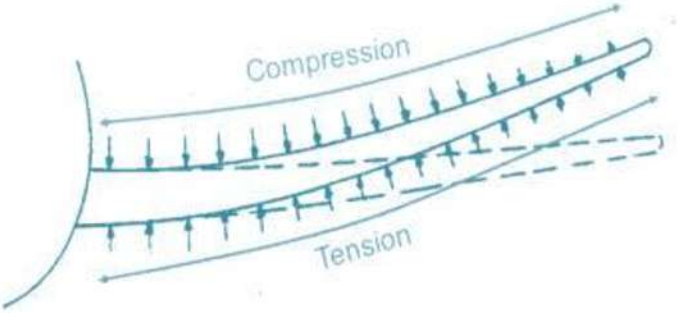

Fig. 3.62: Compression and tension on the upper and lower wing surfaces when the wing is bending upwards (sagging)

Consequently, the ideal cross section of a wing spar is one which has most of its material at the upper and lower extremities, such as the „I"section.
Such a wing spar is comprised of three components; the shear web, which takes only the shear load, and the upper and lower books (or „spar caps") which takes the compressive and tensile forces caused by the bendingmoment.

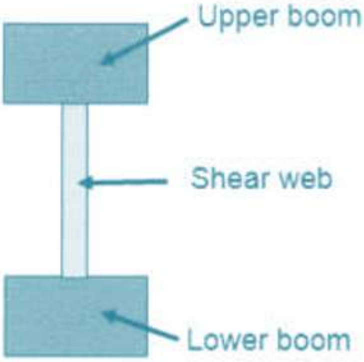

Fig. 3.63: A typical Tsection spar

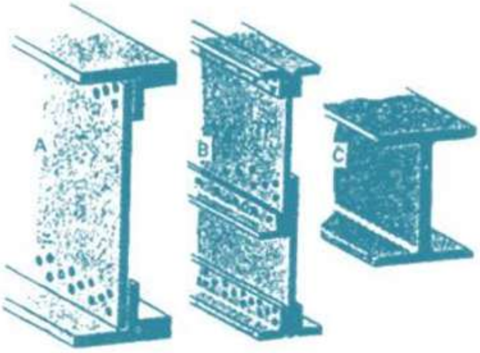

Fig. 3.64: Three examples of T section spars. A - A fabricated spar
B - A fabricated spar with fails-safe provision B - A machined spar

As a rule, a wing has two spars. One spar is usually located near the front of the wing and the other about two thirds of the distance towards the wings trailing edge. Regardless of the type the spar is the most important partof the wing. When other structural members are placed under loadthey pass most of the resulting stresses on to the wingspars.

In general, wing construction is based on one of three fundamental designs:

- Monospar,
- Multi-Spar,
- BoxBeam.

Monospar

The monospar wing incorporates only one main longitudinal member in its construction. Ribs or bulkheads supply the necessary contour or shape to the aerofoil. This kind of construction has no application in transport category aeroplane wings, but is quite often used for flight control surfaces.

Multi-Spar

The multi-spar wing incorporates more than one main longitudinal member in its construction. To give the wing contour, ribs or bulkheads are often included.

Box Beam

The box beam type of wing construction uses two main longitudinal members with connecting bulkheads to furnish additional strength and to give contour to the wing. This is the most used construction design for wings with integral wing tanks.

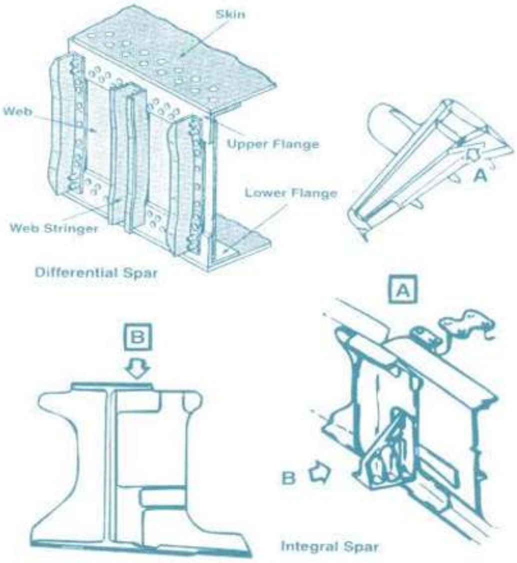

Fig. 3.65: Examples of Spar Constructions

Due to the critical nature of the spar, usually some form of fail- safe method is used in their design. This usually means the construction is made up of two halves, each half of the spar web (top and bottom) can carry the entire load by itself, and a crack in one half of the web will not propagate to the other half. A crack- stopper is also often employed.

Fig. 3.66: Spar fail-safe systems

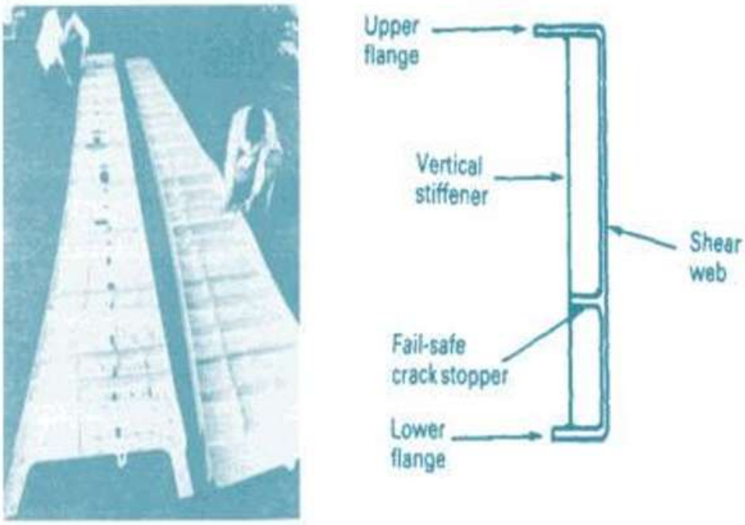

Fig. 3.67: Airbus integrally machined spars

Wing Skin

The skin is part of the wing structure and carries part of the wing stresses. It is an essential load bearing part of the wing structure. The upper wing surface is usually made from aluminium alloy 7075; this material has a high resistance to compression loads. The lower wing surface is usually made from aluminiumalloy 2024 as this material has excellent properties that withstand tensionloads.

As airspeeds increased with their higher flight loads, it became apparent that not only was more strength needed for the skinsof all-metal wings, but more stiffness was also needed. And to gain the strength and stiffness needed and yet keep the weight down, at first the manufacturers of some of the high-speed military aircraft begin the construction of wing skins with thick slabsofaluminiumalloy.Thentheymachineawaysomeof thethickness but leaves enough materialin the proper places to provide just exactly the strength and stiffness needed.

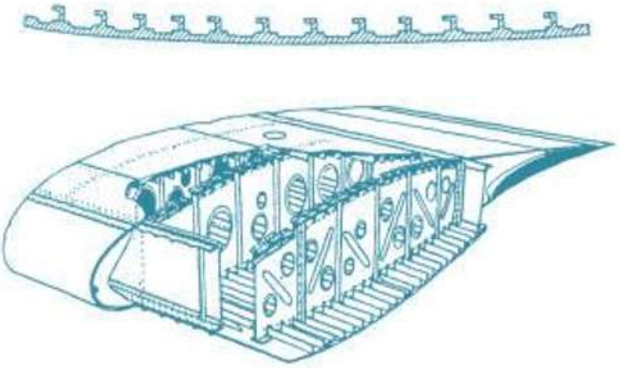

Fig. 3.68:Integrally machined skin

To provide some fail-safe effect, the wing skins are fitted in 'planks‟ as shown in Figure 3.69.

A crack which starts in one crack will not normally propagate to the adjacent plank, thus providing more time for the crack to be found during the routine inspection programme of the aircraft.

Fewer planks are required on the top skin due to that fact that it is in compression most of the time, and cracks are normally initiated by tensile cyclicloads.

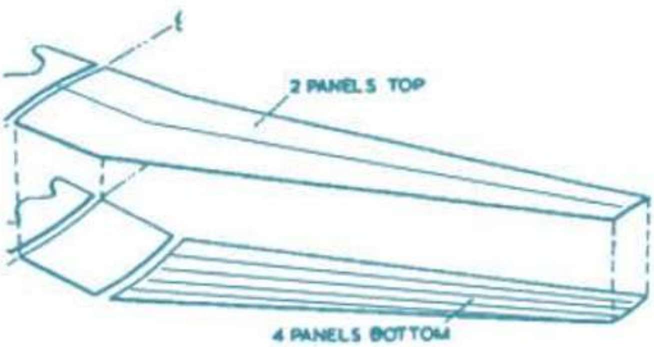

Fig. 3.69: Wing „planks‟ on the upper and lower skins of the BAe 146

Skin Materials

The following table shows some examples of aeroplane skin and rib materials and fabrication methods.

Aeroplane Type	Cover	Construction type	Material Skin / Stringer
Boeing 747	Upper Lower	Skin and stringer	7076 /7075 2024 /2024
L-1011 Tristar	Upper Lower	Skin and stringer Skin and stringer	7075 /7075 7075 /7075
DC10	Upper Lower	Skin and stringer Skin and stringer	7075 /7075 2024 /7075
Airbus A300	Upper Lower	Skin and stringer Skin and stringer	7075 /7075 2024 /2024
Boeing 727	Upper Lower	Skin and stringer Skin and stringer	7178/7178 2024 / 2024
Boeing 737	Upper Lower	Skin and stringer Skin and stringer	7178/7178 2024 / 2024

Focker F28	Upper Lower	Skin and stringer Skin and stringer	7075/7178 2024 / 7075
Boeing 757	Upper Lower	Skin and stringer Skin and stringer	7150/7150 2324 / 2224
Boeing 767	Upper Lower	Skin and stringer Skin and stringer	7150/7150 2324 / 2224
VC10	Upper Lower	Integral machined	7075 /7075 2024 /7075
Concorde	Upper Lower	Integral machined Integral	Hiduminium RR58 Hiduminium RR58

Wing Ribs

Ribs are the structural crosspieces that make up the framework of the wing. They usually extend from the wing leading edge to the rear spar or to the trailing edge of the wing andgives the aerofoil shape.

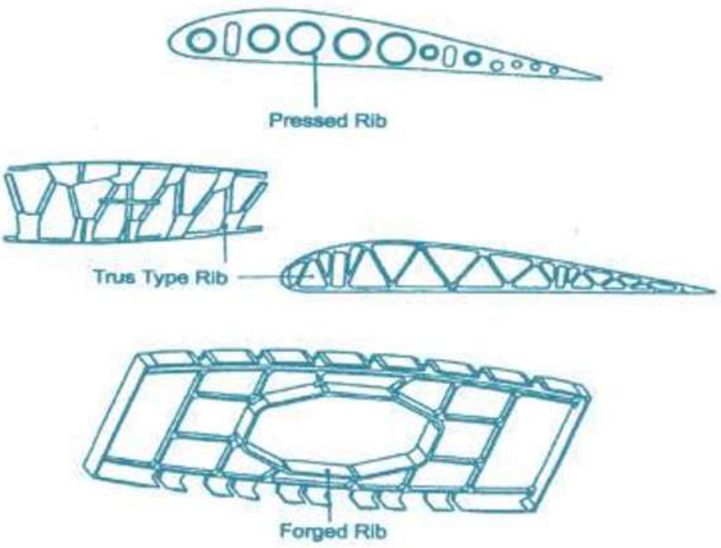

Figure 3.70: Ribs

Wing Tips

They maintain the correct contour of the cross section of the wing, and withstand the compressive forceexperienced between the upper and lower skins when the wing bends up or down inflight/landing. A short rib, known as a false rib, is often placed between the main ribs at the leading edge, to increase the strength at that part of the wing which is vulnerable to bird strikesetc.
Wing ribs may be pressed from sheet aluminum alloy in a hydro press, or they may be built up of sheet metal channels and hat sections riveted to the skin to give it both the shapeand rigidity itneeds.

The wing tip is often a removable unit, bolted to the outboard end of the wing panel. One reason for this is the vulnerability of the wing tips to damage, especially during ground handling and taxiing. If damage does occur to the wing tip it can be replaced in a short time period. Another factor to consider is if the wing tip should accidentally strike something then damage willbelimitedtothewingtipandnotthewholewing.

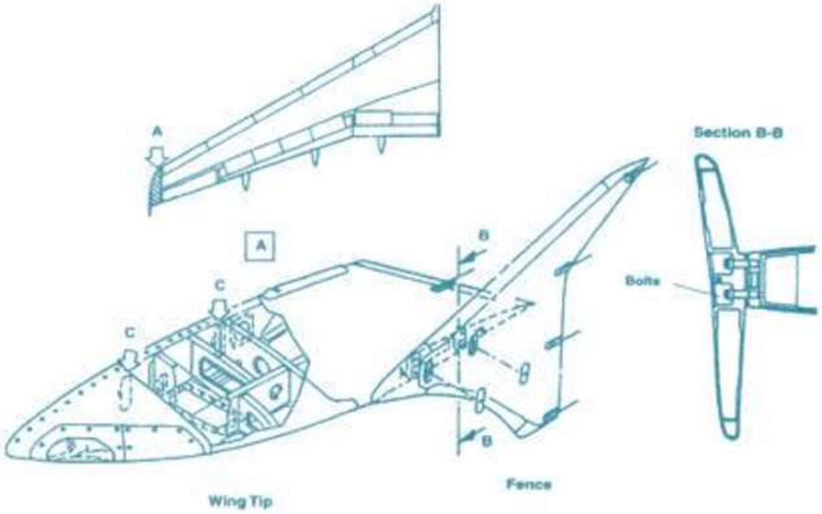

Fig. 3.71: Example of wing tip with fence Wing Attached Components

Leading and Trailing Edge Assemblies

Wing leading edge and trailing edge structures present a particular structural problem in that they do not flex at the same rate as the wing torsion box. This means that their attachment points can create a stress point, leading to a crack in the sparcaps.

Several methods are used to overcome this, which include „floating attachments" such as piano hinges,sacrificial doublers and corrugated strips (wiggle plates) as shown in Figure 3.73 and Figure3.72.

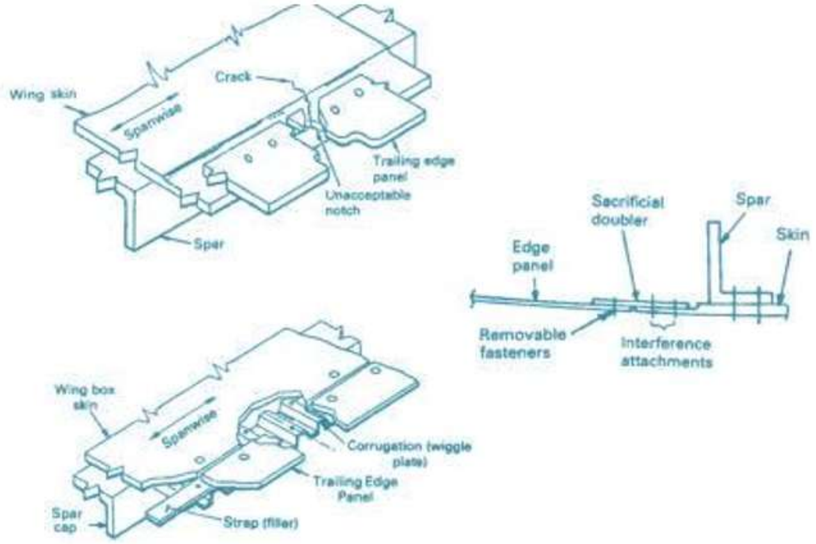

Fig 3.72: Cracks in the spar web or torsion box skin can be prevented by using more flexible corrugated (wiggle) plates or sacrificialdoublers

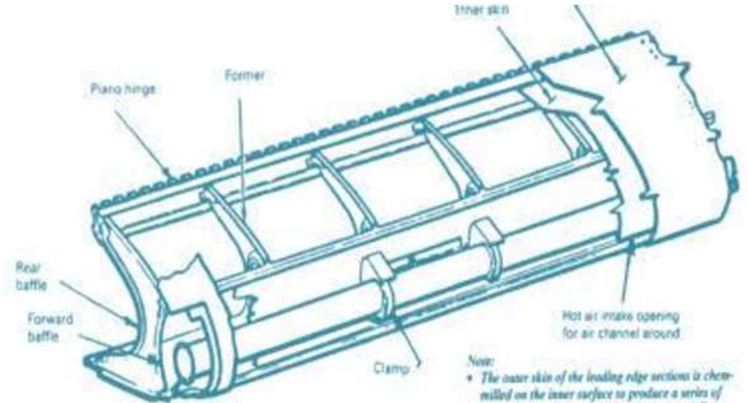

Fig. 3.73: Piano hinge attachment (C130)

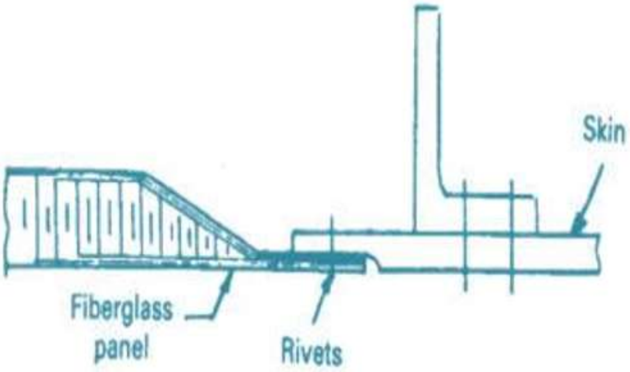

Fig. 3.74: Composite leading edge and trailing edge structures are generally more flexible and can be riveted or screwed directly to the skin or sparcap.

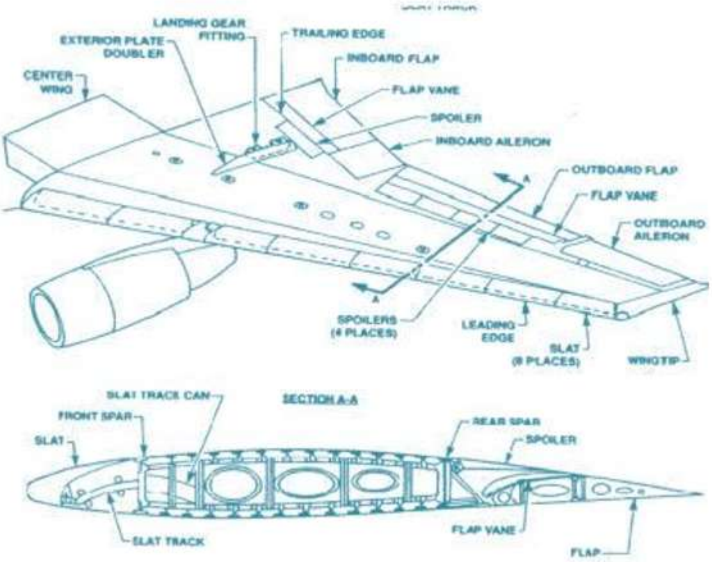

Fig. 3.75: Wing section structure

For certain types of aircraft with engines attached to the wings, the wing also has a centre spar that continues to beyond the outside engine pylon. The connection to the main landing gear requires an extra heavy construction.

This consists of one or more auxiliary spars, that are connected to the rear spar and sometimes goes from the left side to the rightside.

Flap/slat tracks or hinges and flight control surfaces are bolted to the spars or reinforced ribs.

Landing Gear Attachment

The wing support structure for the landing gear has to be strengthened in order to accommodate the landing gear loads. The front trunnion of the landing gear can be attached to the rear spar of the wing. If the landing gear is attached in this manner, a support structure for the landing gear rear trunnion will be necessary; this may be a gear wing beam or may be an extra wing spar. This spar is called a falsespar.

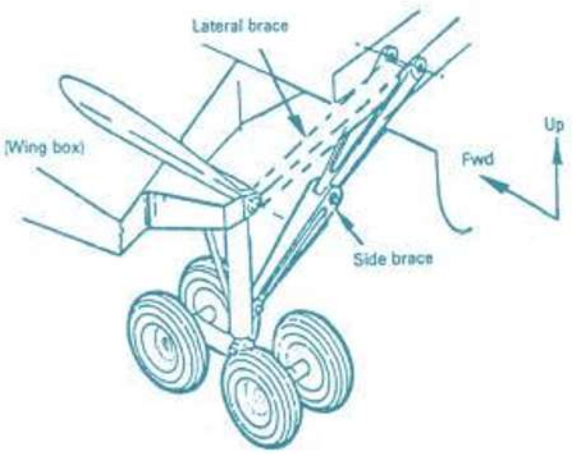

Fig. 3.76: Examples of gear attachment

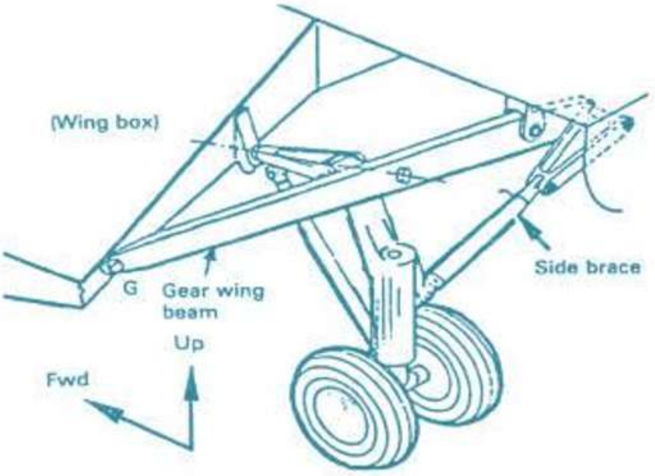

Fig. 3.77: Examples of gear attachment Wing Engine Pylon Attachment

Generally, there are three methods of wing pylon attachment:

- Drag strutinstallation
- Box beaminstallation
- Upper support arminstallation

Drag Strut Installation

The wing pylon structure as illustrated in Figure 3.78 is a cantilever box beam consisting of two upper and two lower longerons. Two side skins transmit the vertical shears and a lower skin primarily carries the lateral shear loads and also acts as a firewall. Forward and aft mount bulkheads are included to transfer the engine loads to the pylon structure and the bulkhead stake the pylon loads onto the wing box structure via lug attachments to the wing front spar of the pylon upperlongerons and utilizes a rear drag strut to transfer the pylon lower longeron loads to a point between the wing front and rearspars.

Box Beam Installation

In Figure 3.78 the pylon box beam design, which is to extend the box structure beyond the wing front spar fitting and ends at the aft pylon fitting, which is attached between the wing front and rear spars. This design puts more weight on the pylon, butsaves weight on the wing box and minimizes some potential fatigue problems at the wing lowersurface.

The pylon is attached to the wing, through a fitting on the wing front spar for vertical and side loads, to a fitting beneath the front spar on the wing lower surface for thrust loads, and to a fitting attached to wing box structure on the wing lower surface at the end of the pylon for vertical and side bending loads.

Upper Support Arm Installation

- It is the most efficient structure to react the moment loads due to the overhanging engine; the moment arm A-D is obviously greater than A-B and, therefore, a lighter structure isachieved.
- The most efficient configuration transfers the engine moment loads into the wing box structure and therefore further weight saving isobtained.
- This benefits the design of engine position closer to the wing lower surface for the purpose of engine-to- groundclearance.
- It inherently has the structural fail-safe feature due to the redundantdesign.
- The engine position can be located further forward without severe structural weightpenalty.

The disadvantages are:

- Complicated structural analysis due to its redundant design.
- More rigging problems to ensure the proper structural loaddistributions.
- Interference with wing leading edge control systems such as control cables, rods, hydraulic tubes, heating ducts for de-icing,etc.

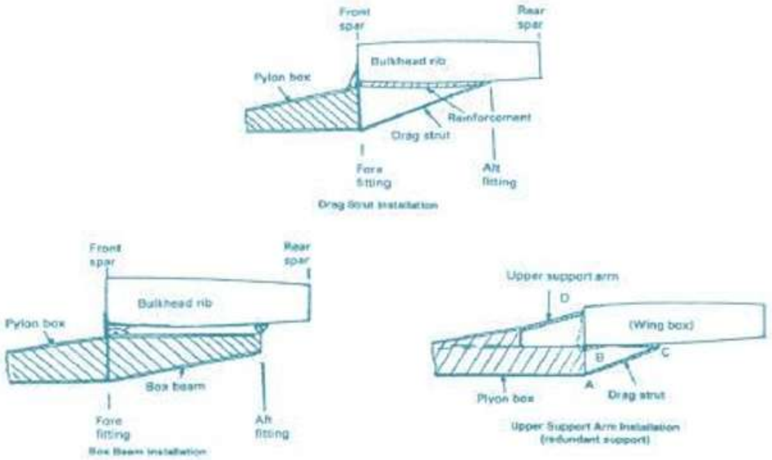

Fig. 3.78: Engine pylon attachment Flight Control to Wing Attachment

Figure 3.80 shows an aileron hinge fitting. This fitting is machined from aluminiumalloy and is bolted to the rear spar of the wing. The fitting has a bushing to accommodate the nut and bolt assembly that passes through a bearing on the aileron hinge. The ailerons are usually hinged at threeplaces.

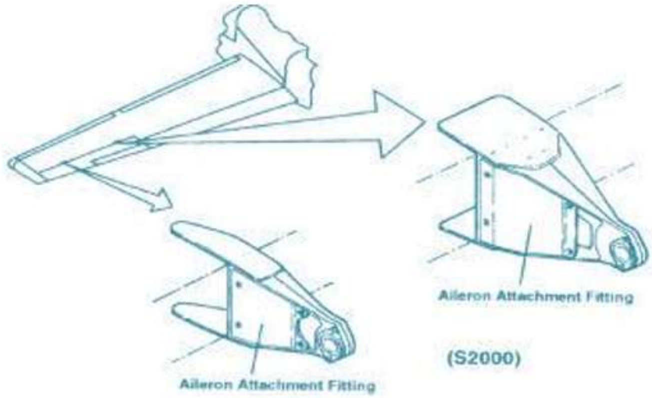

Fig. 3.79: Example of aileron attachment

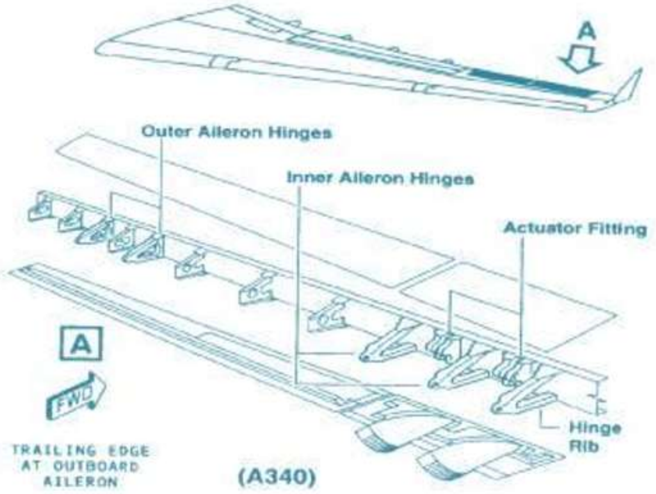

Fig. 3.80: Example of aileron attachment Storage of Fuel

Wings and in some cases also the horizontal stabilizer, are used for the storage of fuel. The area between the front spars and the rear spars is used. Various constructions are possible. The viscosity of the fuel used and the safety requirements that are set for the storage of the fuelrequire good sealing.

Integral Fuel Tanks

Integral fuel tanks are formed within the aircraft structure by sealing compartments like wing sections during manufacture. Internal diaphragms both divide the wing into a number of tanks, and also prevent 'surge', external or internal pipes connect the tanks to the fuelsystem.

One problem when sealing is that wings and tail surfaces are constantly moving in flight. In an integral tank construction, the area between spars, ribs, upper and lower skin panels is completely sealed off by rivets and all seams are closed with sealant so that no fuel can leakthrough.

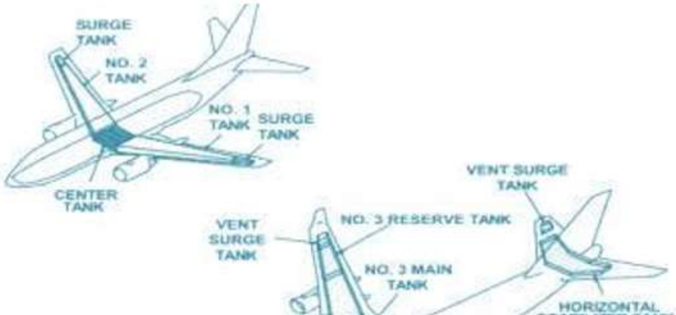

Fig. 3.81: Integral tank construction

The ribs forming the ends of fuel tanks differ from other ribs in that their webs extend to join the inside surfaces of the wing skin panels between the stringers.

The wing ribs in the integral tanks act as baffle platesto prevent excessive fuel surges. Some of the wing ribs contain a series of baffle check valves to prevent fuel flow awayfrom

the fuel boost pumps.

A number of methods are used for sealing the structure, including the use of sealant as a ‘faying compound’ between mating surfaces and the use of ‘filleting compound’ at the edges. The interior of the tank is then further protected by flexible sealant coatings, which may be applied by spreading, brushing or spraying. All the above methods may be used to seal the tank which may also be accompanied by special paint schemes, which are designed to minimize microbiological attack. A suitable number of large access panels, hand holdsand tank connections, are included within the structure. The access panels are normally made fuel tight by using seals and sealant at the matingsurfaces.
Access to some of the equipment located inside the fuel tanksis not directly possible through the fuel tank access panels. To obtain access to this equipment, personnel must enter the tank through the nearest access panel and go through rib access openings into the areas between ribs where no access panel is provided.

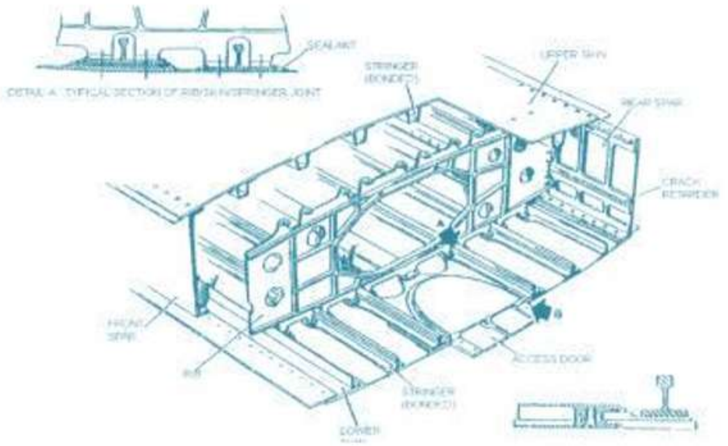

Fig. 3.82: Integral tank construction

Flexible Fuel Tanks

Flexible fuel tanks are reinforced rubberised bag type fuel tanks placed in a non-fuel tight compartment.

Fig. 3.83: Flexible tank construction

The tank incorporates all the components as required for the rigid removable fuel tank such as a vent, drain and fuelquantity indicator etc. The airframe compartment for the tankis used completely, with a small opening provided for the insertion of the tank. When inserted into the compartment the tank is held in place by several press stud ‘buttons’ or „snaps“ which attach the tank to the compartment. These tanks are found on many medium sizedaircraft.

Rigid Removable Fuel Tanks

A rigid removable fuel tank is a tank that is installed in a compartment designed to hold the tank. The tank must be fuel- tight but the compartment in which it fits is not fuel tight.

The tank is usually constructed of aluminiumcomponents welded together. A baffle or baffles may be installed inside the tank to reduce the free movement of fuel called ‘surge’. The baffles are attached to the tank structure with apertures to allow a flow of fuel but reducing the ‘surge’ action of thefuel.

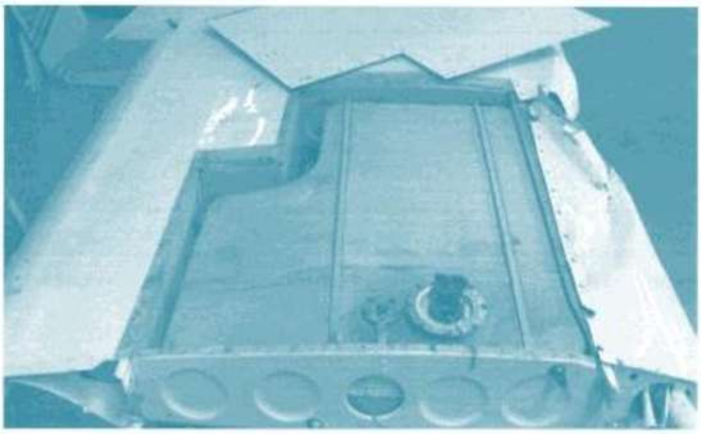

Fig. 3.84: A rigid removable tank (Cessna) External Fuel Tanks

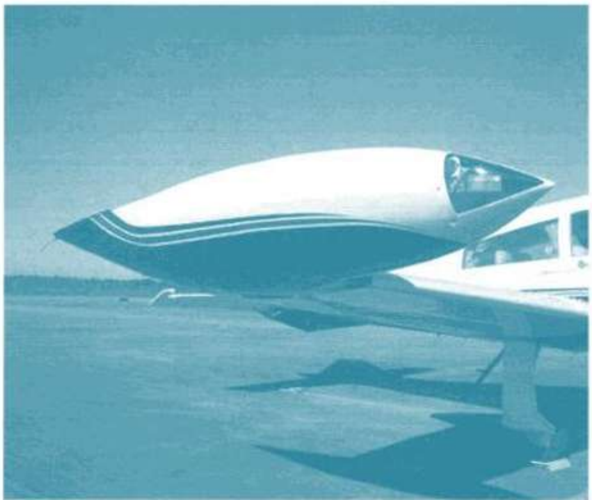

light aircraft are fitted with external fuel tanks in addition to the main wing fueltanks. These provide the aircraft with longer range. Fitting the external fuel tanks to the wing tips provides maximum bending moment relief at the wing root, and helps to prevent induced drag,albeit at the expense of a slightly increased profile drag.

Fig. 3.85: An external (wingtip mounted) fueltank

13.3.3 Stabilisers(ATA 55) GeneralArrangement

The empennage of an aeroplane is the assembly of tail surfaces that are used both for control and for stability. Regardless of their location or configuration, they serve the same functions. Longitudinal stability and control are provided by the horizontal surfaces, while directional stability and control are provided by vertical surfaces. The location of the horizontal tailsurfacesmustbetakenintoconsiderationbecauseofthe turbulence produced by the airflow over the wings. Some aeroplanes have these surfaces located quite low on the fuselage.

Fig. 3.86: Conventional empennage configuration

A number of modem aeroplanes use the T-tail configuration. The horizontal tail surfaces are mounted on top of the vertical surfaces. This keeps them out of the turbulence caused by the wing and preventsthe rudder being blanketed by the horizontal surfaces and losing its effectiveness in aspin.

The stabilizers usually are two or multi-spar structures.

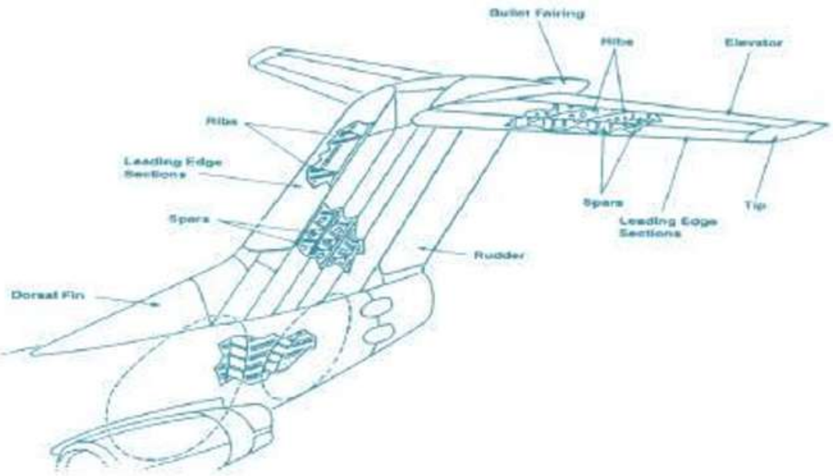

Fig. 3.87: T-tail configuration

As far as the construction is concerned, the wings, the stabilizers and the vertical stabilizers have much incommon. The vertical stabilizer is normally bolted to the top centreof special reinforced frames of the tail fuselage section. The vertical fin is bolted to fitting-bracketsto facilitate removalandinstallation.

On modern aircraft such the Airbus A320 primary structural components of the stabilizers (spars, ribs and skin panels) are made of laminations of Carbon Fibre Reinforced Plastic (CFRP). All other components are made of the same material or Glass-Fibre Reinforced Plastic (GFRP) or of lightalloy.

The trimmable horizontal stabilizer (THS) is a single-piece structure mounted through, and supported by the fuselage tail section. The horizontal stabilizer provides the supporting structure for the LH and the RH elevator. The angle of incidence of the THS can be mechanically adjusted by means of a trim control wheellocatedintheflightcompartment.TheTHSisinstalledat

the tail section in a large cut-out, and is attached to the fuselage at three points, by the THS actuator and by the two hinge points on either side of the fuselage.

The THS comprises of a centre spar box, the LH and RH spar boxes, the LH and RH leading edges, the LH and RH trailing edges, the LH and RH stabilizer tips, the LH and RH stabilizer aprons and the stabilizer attach fittings. The main structural component of the THS is the stabilizer spar box, and all loads on the horizontal stabilizer are transmitted through the centre spar box and its attachment fittings. The THS can be removed as a completeunit.

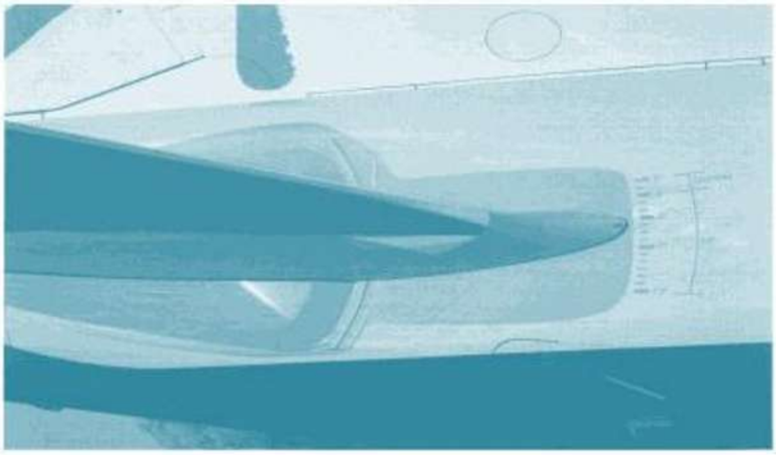

Fig. 3.88: Trimmable horizontal stabilizer (leading edge shown)

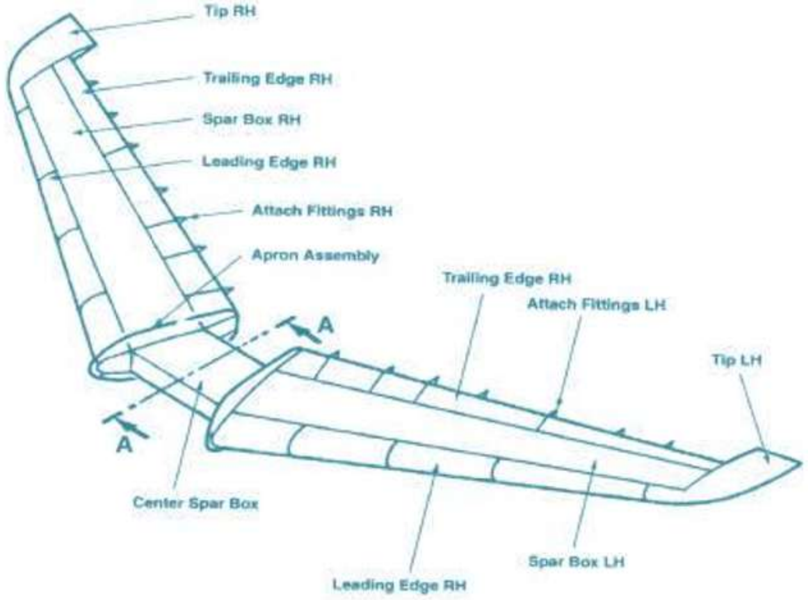

Figure 3.89: Typical horizontal stabilizer

The elevators and rudders are hinged to brackets bolted to the rear spar of the stabilizers.

13.3.4 Flight Control Surfaces (ATA 55/57)

GeneralFeatures

The Monocoque construction form is often used for the control surfaces. Considering the primary flight controls, the elevator normally consists of a spar, ribs and skinning panels. While the rudder and aileron normally consists of a spar, honeycomb core and skinning panels. Actuators and hinge brackets on all primary control are normally attached to thespar.

Static dischargers are installed near the tip of the trailing edge. They let static electricity discharge from the aircraft.Secondary control surfaces are normally constructed like rudders.

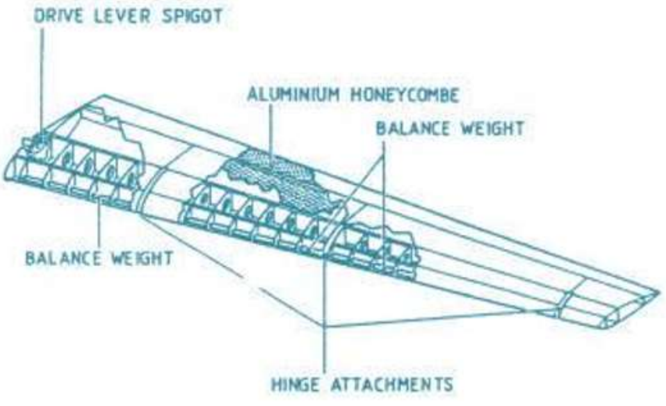

Fig. 3.91: Honeycomb core control surface

All-metal, riveted or bonded, control surfaces weretraditionally used in transport aircraft. Howeverresin-fibre composite materials have become more popular in modern transportaircraft.

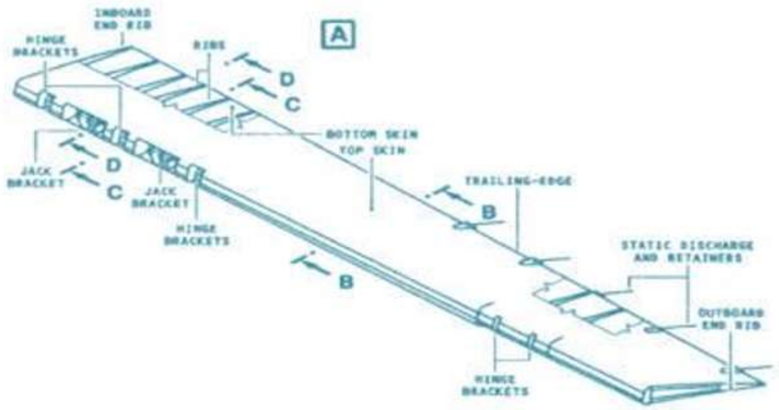

Fig. 3.92: Composite control surface

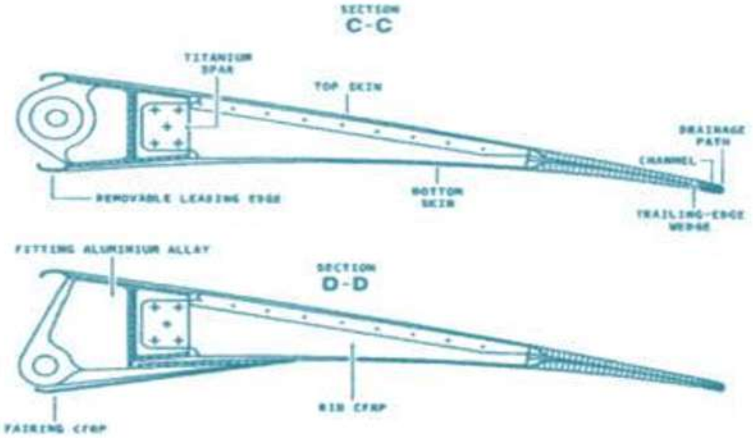

Fig. 3.93: Composite control surface cross sectional views Balancing

To lessen the force required to operate the primary control surfaces control surfaces are usually balanced statically and dynamically.

Aerodynamic Balancing (Dynamic balance)

A large control surface can be difficult to move with conventional controls. For this reason, some controls have a portion of the surface extending out ahead of the hinge line,like the overhang rudder in Figure 3.94 (a). When the rudder is deflected, air strikes the portion ahead of the hinge line and assists in deflecting it and holding itdeflected.

An internal balance panel is used on some large aeroplanes to assist the pilot in moving the ailerons. The hinged balance panel forms a movable partition for the sealed space ahead of the aileron. When the aileron is deflected upward, as seen in Figure 3.95, the air over its bottom surface speeds up and produces a low pressure through the vent gap below the balance panel.This low pressure pulls the balance panel down and puts a force on the leading edge of the aileron in such a direction thatit assists the pilot in holding the aileron deflectedupward.

Such aerodynamic balancing will have no effect on hydraulically operated controls, since aerodynamic loads are not passed back to the cockpit via a hydraulicsystem.

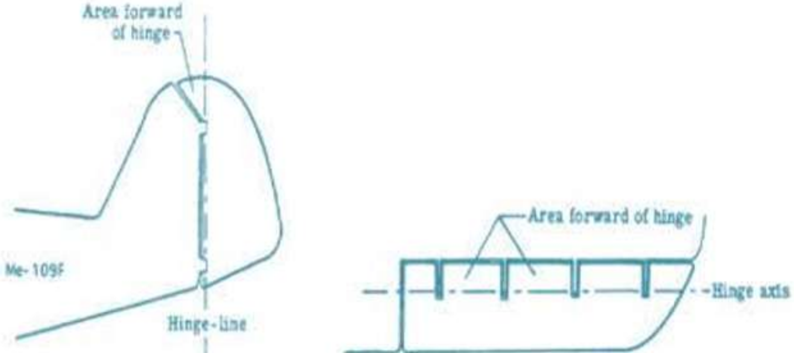

Fig. 3.94: Types of aerodynamic balancing

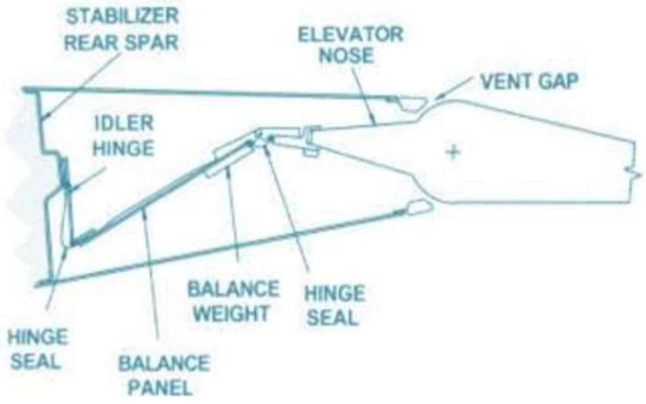

Fig. 3.95: Internal Balance

Mass Balance (Static balance)

Control surface flutter is one of the more serious problems high- speed aeroplanes have had in their design evolution. To eliminate flutter, it is extremely important that the control surfaces be balanced so that their centre of gravity does not fall behind their hinge line.
This is done by attaching a carefully calculated mass-balance weight (usually of lead but sometimes made of depleted uranium) ahead of the hinge line as shown in Figure 3.96.

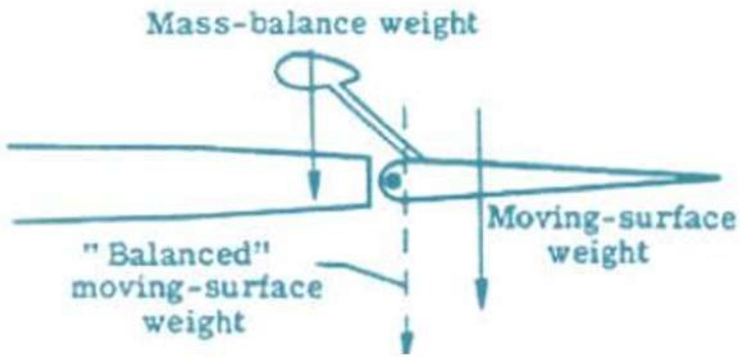

Fig. 3.96: Aerodynamic balancing

11.3.5 Nacelles and Pylons (ATA 54)

GeneralFeatures

On turbo-jet engine installations, cowl panels are designed to Control surface flutter is one of the more serious problems high- speed aeroplanes have had in their design evolution. To eliminate flutter, it is extremely important that the control surfaces be balanced so that their centre of gravity does not fall behind their hinge line.
This is done by attaching a carefully calculated mass-balance weight (usually of lead but sometimes made of depleted uranium) ahead of the hinge line as shown in Figure 3.96.

provide a smooth airflow over the engines and to protect them from damage. The entire engine cowling system includes a nose cowl, hinged removable cowl panels, exhaust nacelle and thrustreverser.
The primary functions of the nacelle are to:

- Cause a smooth airflow both around and into the engine to decrease drag and give better engineperformance.
- Prevent damage to the external surface of the engine and itsaccessories.
- Give additional strength to the engine structure so it is more resistant to the forces that can cause it to bend (cowl loadsharing).
- Permit service door access to the engine and its components.

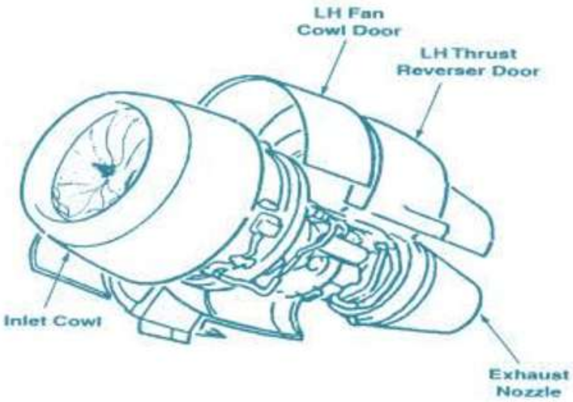

Fig. 3.97: Nacelle configuration

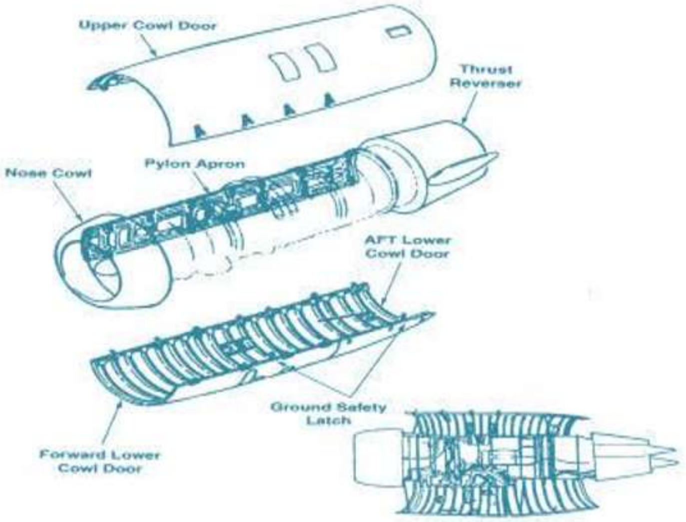

Fig. 3.98: Nacelle cowls

All the skin-panels of nacelles made of composite are provided with lightning protection strips.

Nose Cowl

The nose cowl is the foremost section of the engine nacelle and provides maximum airflow into the engine compressor. It is normally bolted to the engine inlet case and its leading edge is supplied with anti-icing air.

The main structure of nose cowls is normally made of conventional sheet metal structure, riveted or bonded. The skinning panels are usually made of composite sandwich acoustic structure.

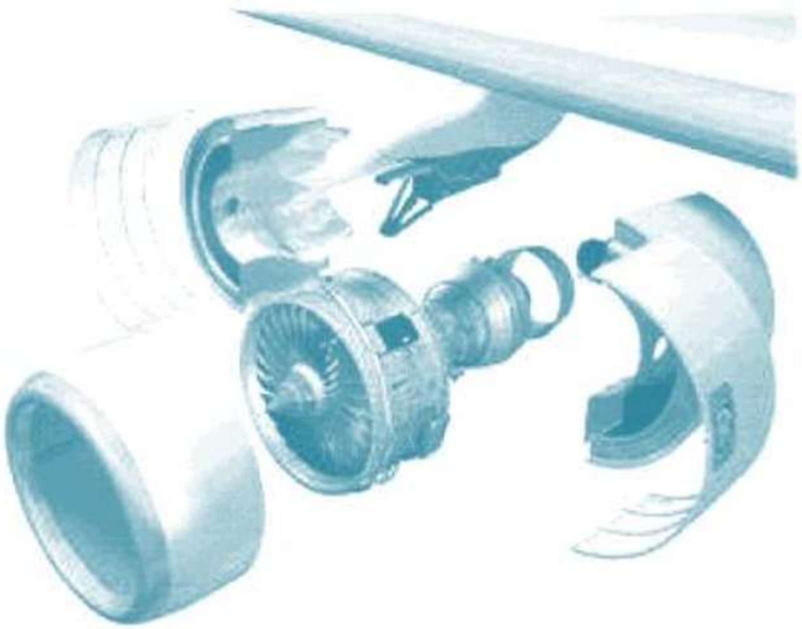

Fig. 3.99: Cowl configurations

Hinged Cowling

The hinged cowling (cowl doors) designed as large opening doors, usually provided with quick- release latches, facilitate access to the engine built up equipment. From structural point of viewthey can be divided into twocategories:

- Cold section doors (fancase)
- Hot section doors (coreengine)

Cold section doors are normally a sandwich construction with a Honeycomb core and composite skinpanels.

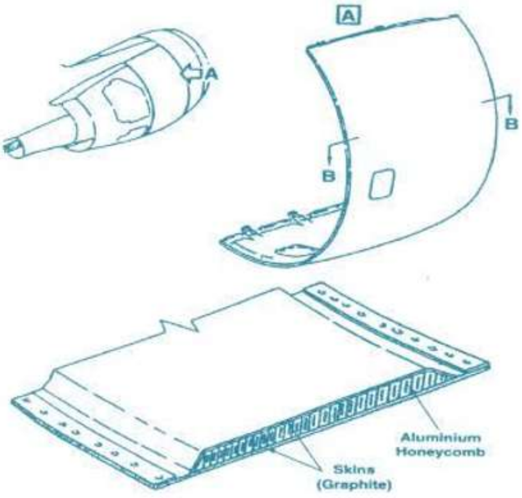

Fig. 3.100: Cold section door

Hot section door structure provides fire protection and support capability for aerodynamic, inertial and engine loads thatoccur in flight and groundoperation. Very modern engine hot section doors are rather of composite than of metal sheet construction, but to provide fire protection are covered with stainless steel blankets and titanium alloys heatshields.

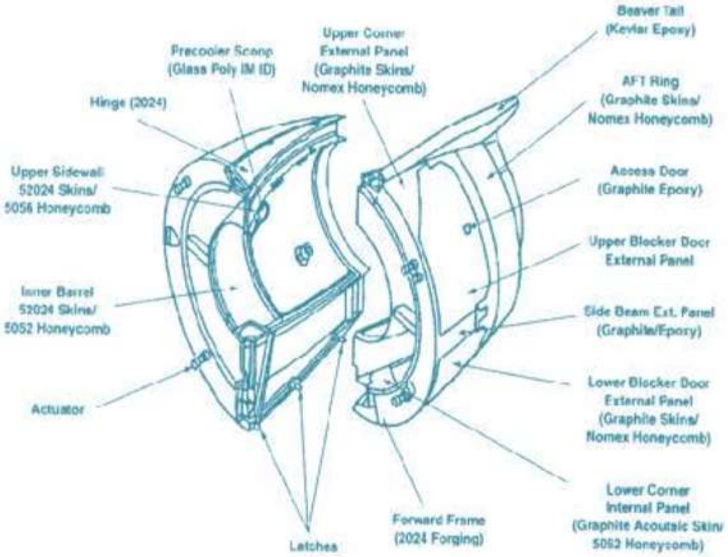

Fig. 3.101: Hot section cowl door

Fig. 3.102: Hot section cowl doors -open

Pylons

Jets and turbofans, if not buried in the fuselage, or wing-roots, need to be pylon mounted underwing or rear fuselage. The side pylons for rear fuselage mounting are sometimes called "stub- wings". Both must support the weight of the powerplant and transmit its thrust into the adjacent airframe.

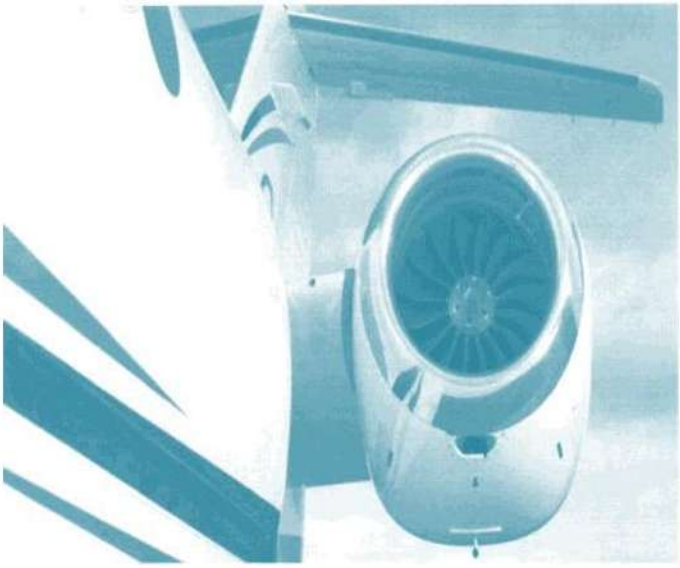

Fig. 3.103: Pylon configuration - rear fuselage mounted

As turbo-jet engines develop very little torque, their mountings can be less robust than those required for turbo-prop engines. The latter have to be mounted in tubular sub-frames out in front of either the fuselage or wing, allowing plenty of vertical clearance between the propeller and theground.

The function of the engine pylons is:

- To support theengine
- To transmit the engine thrust to theaircraft
- To enable the routing and attachment of all thesystems connected with the engine (electrical wiring, hydraulic, bleed air and fuellines).
- To serve as fire-barrier between engine and aircraft structure.

Pylon structure, like whole aircraft structure, is divided into primary and secondary sections.

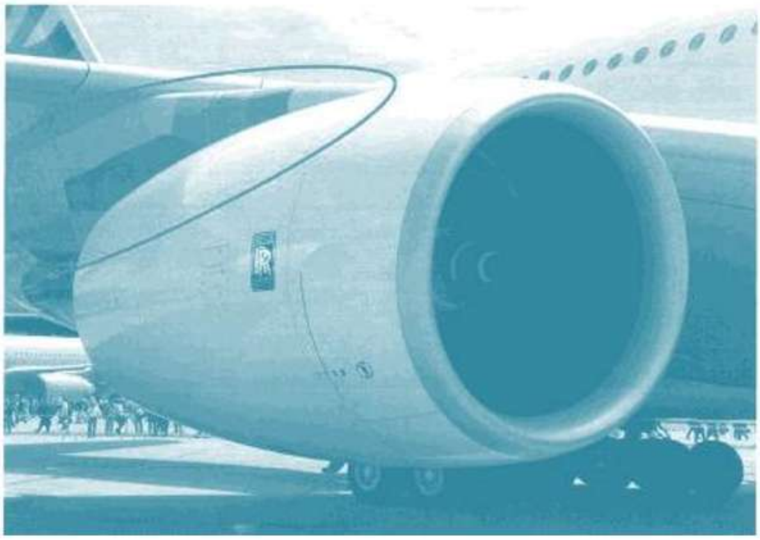

Fig. 3.104: Pylon configuration – wing mounted]

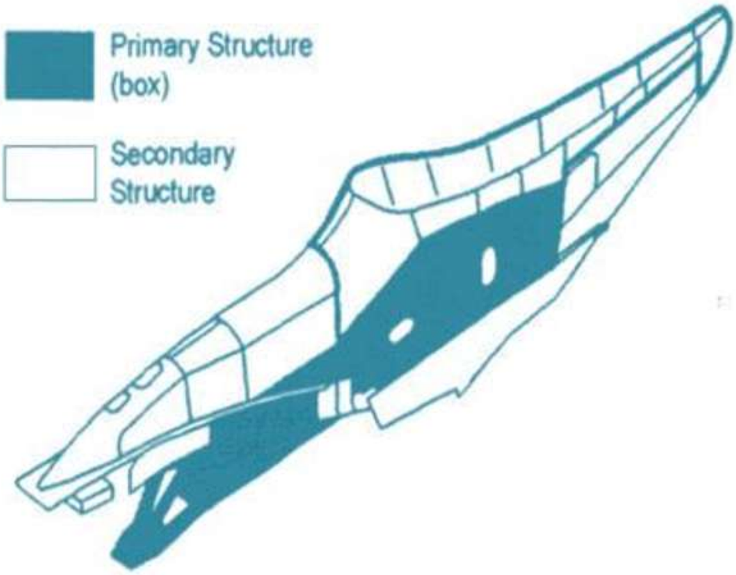

Fig. 3.105: Pylon Sections

Since the box (primary structure) must carry all the loads and serve as a firewall, it is normally a titanium and steel alloy riveted sheet construction.

Secondary section of pylon which is not part of the firewall is normally made of composite panels.

Firewalls

Powerplants together with their pylons are often divided into zones by fireproof bulkheads, usually made of stainless steel, titanium or thermoplastics. Fire barriers divide the cavities located between the engine and nacelle into compartments in order to limit the propagation of fire.

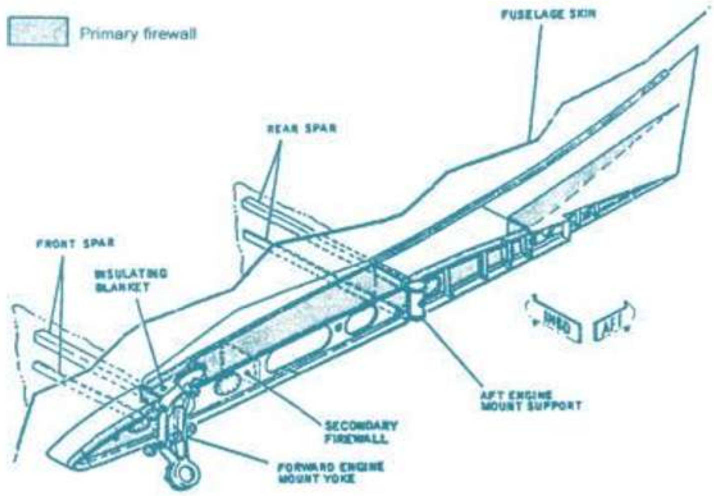

Fig. 3.106: Firewall configuration

Normally the hinged cowlings are also part of the firewall, but only effective when the doors are closed. Hinged cowlings are surrounded by airtight fire seals.

The general function of fire seal are as follows:

- Prevent entry of combustible matter into areaswhere auto-ignition may occur and avoids propagation of fire.
- Confines effects of pneumatic duct and turbine rupture or majorleaks.
- Prevents air from the hot section of the engine core from circulating in the fan casearea.
- Facilitates the effective use of the fire detection system by containing the fire in onearea.

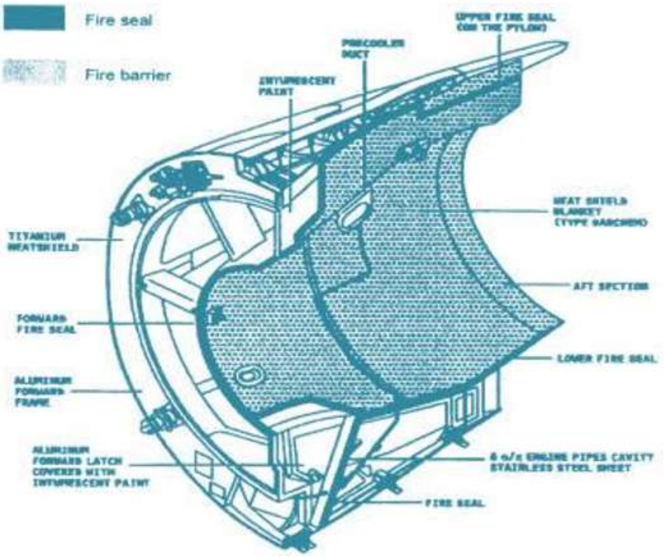

Fig. 3.107: Fire Seal

Engine Mounts

The engine mount system serve as interface between the engine and the pylon. It is a fail-safe damage tolerant design capable to transmit all the loads from the engine to the aircraft structure.

There are basically three engine attachment configurations used for transport aircraft:

- wingmounted
- tail-sidemounted
- tail mounted (inside or on top ofit)

Most engines are attached to its pylon by two or three mounts. As the engine develops great heat while working the mounting system must allow expansion in all directions. Because of this one of the mounts normally does not take thrust and allows the engine to expand in the longitudinaldirection.

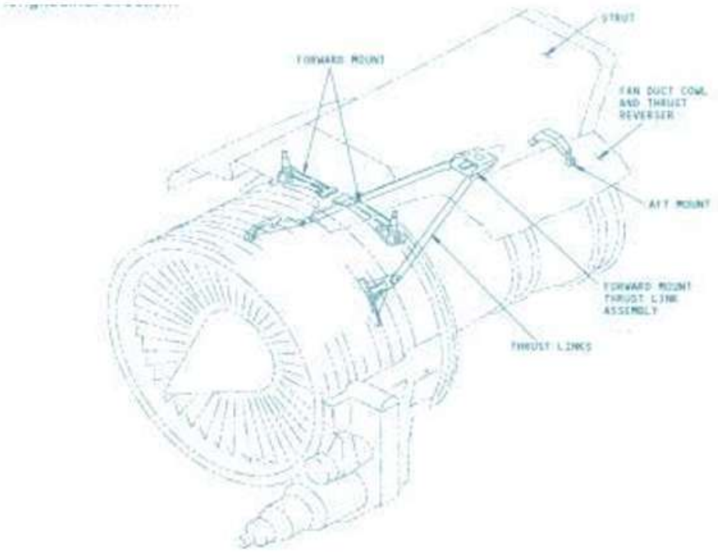

Fig. 3.108: Wing mounted engine configuration

Loads

The engine mount system must be capable of carrying side, vertical, thrust and torque loads. The system also provides vibration-dampening to soften engine vibrations.

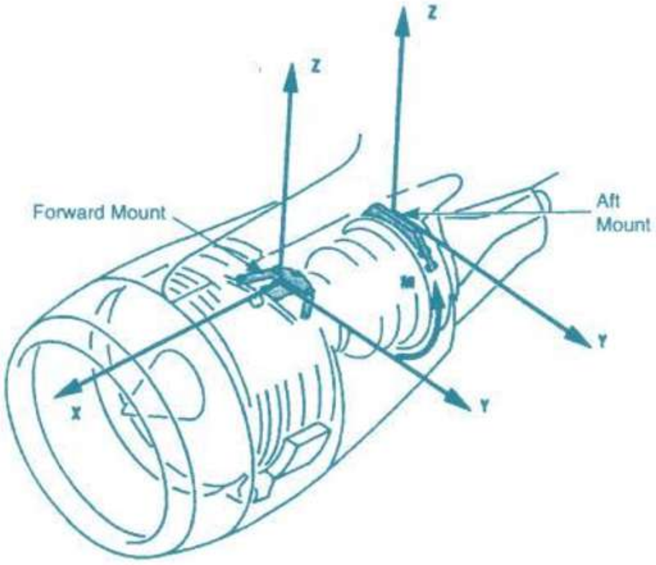

Fig. 3.111: Engine mount loads

11.4:AIR CONDITIONING AND CABIN PRESSURISATION (ATA 21)

Introduction

Environmental systems are those aircraft system used to make the interior environment of the aircraft comfortable and /or habitable for human being.
Depending on the type of aircraft and altitude of operation, this may involve only supplying a flow of fresh through the cabin by using air vents and scoops.
If the temperature must be adjusted for crew and passenger comfort some method of heating or cooling the cabin interior is required.
If the aircraft is to be operated at high altitude pressurization is necessary to make the environment acceptable to the occupants of the aircraft.
Air-conditioning System

Cabin Temp Control Distribution Pressurization Cooling
Heating

Heating Systems Exhaust Heating System
The simplest type of heating system often employed on light aircraft consists of a heater muff around the engine exhaust stacks an air scoop to draw ram air into the heater muff ducting to carry the heated air into the cabin and a valve to control the flow of heatedair.
The a heating system consists of the muffler and heat shroud ducting to the air box and windshield defroster outlets and during to the heat outlets in the cabin.
The amount of heat delivered to the cabin is controlled from the cockpit.
Exhaust heating system must be given regular inspection to assure that exhaust fumes cannot enter the cabin of the airplane.This requires that the shrouds or muffs around the exhaust pipes or mufflers be removed to inspect for cracks through which exhaust fumes can enter the heater ducts.
One method of checking for cracks is to pressurize the exhaust pipes with compressed air and apply soapy water to all areas where cracks may possibly occur. If there is a crack the air will cause soap bubbles to form at thecrack.

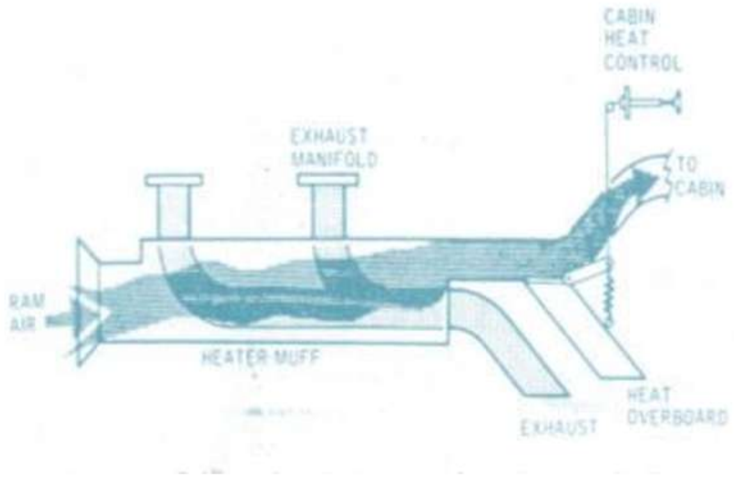

4.1 Exhaust Heating System for a lightairplane Combustion HeaterSystems

This type of heater burns airplane fuel in a combustion chamber or tube to develop the required heat. Air flowing around the tube is heated and carried through ducting to the cabin.
The heater fuel pump and all external fittings on the heater are enclosed in metal housings that are vented and drained as a precaution against fire in the event of leaky fittings. Fuel passes from the heater fuel pump through a solenoid valve to the combustion chamber spray nozzle. When the cabin heater

switch is placed in the HEAT position, current is supplied to the combustion air blower and to the ventilating which start the spark plug firing. As the combustion air blower air increases the vane type valve at the inlet of the combustion chamber opens. This actuatesamicroswitchwhichinturnoperatesthesolenoidvalve

thus allowing fuel to spray into the heater where the spark plug ignites the fuel. When the heated air flowing from the heater to the cabin exceeds the temperature for which the thermostat is set the thermostat closes the solenoid valve and stops fuel flow to the heater. The heater thermostat cools and the solenoid valve opens again to allow fuel to flow to the heater. Heated air flows from the heater and the thermostat again causes the solenoid valve to close. This cycling on and off continues and the heater thereby maintains an even temperature in the cabin.

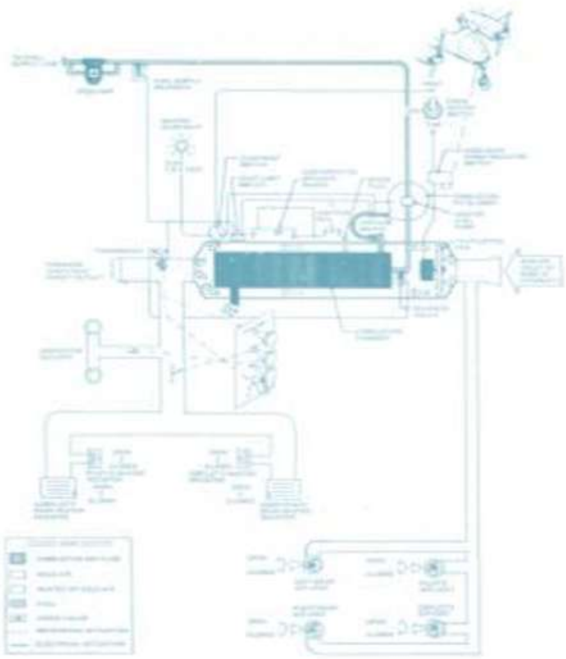

4.2 Combustion heater system for a light twin airplane (Cessna Aircraftco)

Electric Heating Systems

Electrically operated heaters are used on some aircraft to provide heat in the cabin area when the aircraft is on the ground with the engines not running.

The auxiliary electric heat system draws air from the inside of the aircraft cabin by the use of a recirculation fan. The air then passes over electrically heated coils and flows.

The system incorporates safety feature in the system design. An airflow switch must sense that the recirculation fan is moving air through the heater before the heater can operate.

Overheating of the system turns off the heater and illuminates an enunciator light.

Bleed Air

Turbine aircraft normally make use of compressed air from the turbine engine to provide the hot air for cabin heating. When a turbine engine compresses air prior to directing it to the engine combustion chamber the air temperature of this air is increased by several hundred degrees Fahrenheit. This hot compressed air called Bleedair.

The cabin heating system consists of ducting to contain the flow of air a chamber where the bleed air is mixed with ambient or recalculated air valve to control the flow of air in the system and temperature sensors to prevent excessive heat from entering the cabin.

Bleed air heating system include check valves to prevent a loss of compressor bleed air when starting the engine and when full power is required of the engine recirculationfanstomove the air though the ducts and provide a flow of ambient or cabin air to the mixing chamber and engine sensors to eliminate bleed system if one engine of a multiengine aircraft becomesinoperative.

Some Basic Science Principle

As liquids change to a gas they absorb heat. This heat is called the latent heat of vaporization.

As a given quality of gas is condensed to a liquid it emits heat in the same amount that it absorbs when being changed from a liquid to a gas.

When a gas is compressed its temperature increases and when the pressure on a gas is decreased its temperature decreases.

Another law of science used in vapor cycle cooling system is that when two materials have different temperature and heat is free to flow between them they will attempt to equalize.

Cooling Vapor Cycle Cooling System

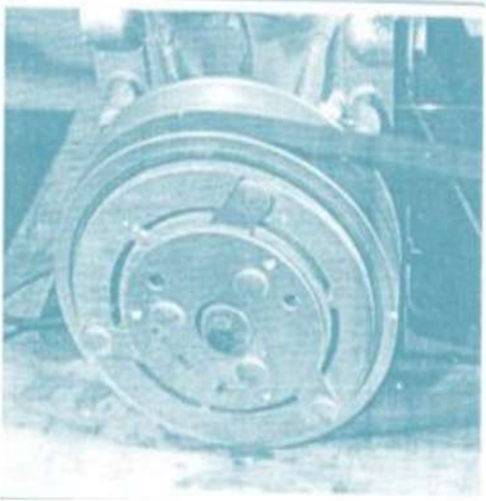

4.3 A Magnetically controlled clutch turns the compressor on and off as required to cool the cabin

Air Cycle Cooling System Vapor Cycle Cooling System Components

Compressor

The compressor increases the pressure of the Freon when it is in vapor form. This high pressure raises the condensation temperature of the Freon and produces the force necessary to circulate the Freon through thesystem.

The compressor isdriveneitherbyanelectricmotororbyairturbinedrivemechanismormay be engine driven.Thecompressormaybeacentrifugaltypeorapistontype.

Condensor

At the condenser the gas passes through a heat exchanger where outside (ambient) air removes heat from the Freon. When heat is removed from the high pressure Freon gas, a change of state takes placeandthe Freon con• densetoaliquid.Itisthiscondensationprocesswhich releasestheheat the Freon picks up from the cabin air.

Receiver Dryer

The receiver dryer filter is essentially a reservoir containing a filter and a desiccant. A sight glass is usually located on top of the receiver to allow observation of the fluid flow through the unit. If bubbles are seen in the fluid the system refrigerant is known to be low and requiresreplenishment.

Expansion Valve

The high pressure liquid refrigerant, after leaving the receiver dryer passes through the thermal expansion valve. This valve consists of a variable orifice through which the high pressure liquid is forced. Low pressure exits at the out let side ofthe expansion valve through the evaporator and to the inlet of the compressor. As the refrigerant passes through the expansion valve into the low pressure area it begins to break up into droplets and by the time it leaves the evaporator it is agas.

The orifice for the thermal expansion valve is adjusted automatically by the pressure from a thermal sensor which senses the temperature of the gas leaving the evaporator .If the gas is warmer than it should be thus not providing sufficient cooling to the cabin the expansion valve provides greater restriction producing smaller droplets and hence greater cooling .if the gas is too cool the expansion valve provides less restriction of the liquid producing larger droplets and therefore less cooling capability.

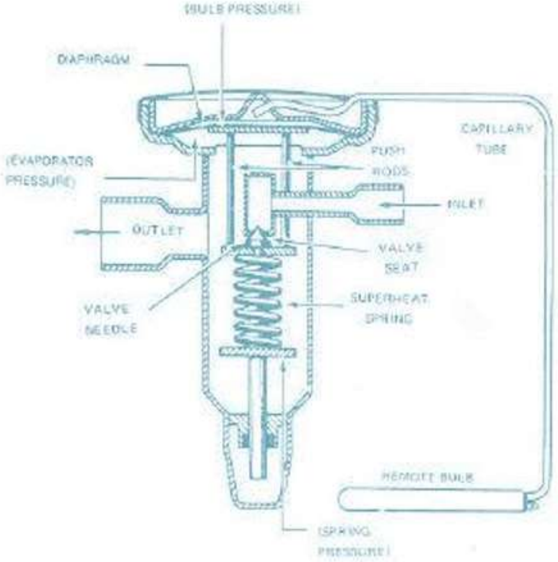

4.4 ExpansionValve

Evaporator

It is a heat exchanger forming passage for cooling air flowandfor Freon refrigerant. Airtobecooledflowsthroughtheevaporator.

The Freonchangesfromaliquidtoavaporat the evaporator. In effect,the Freon boils in the evaporator, and the pressure ofthe Freon iscontrolledtothepointwheretheboiling(evaporation) takesplace ata temperature whichislowerthanthecabinairtemperature.Thepressure (saturated pressure) necessarytoproducethe correctboiling temperature mustnotbetoolow; otherwise,freezingofthemoistureinthecabinair will blockthe air passages of the evaporator.Asthe Freon passesthrough theevaporator,it is entirely convertedtothegaseousstate.

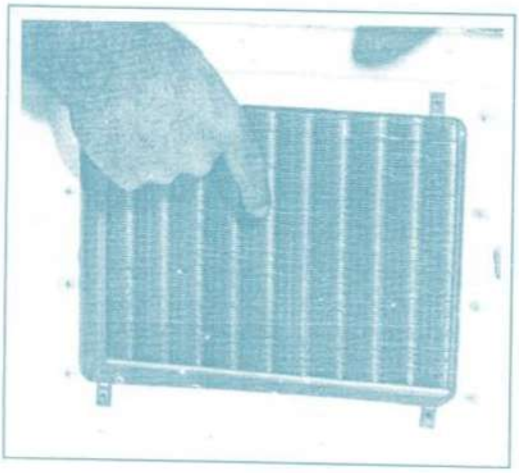

4.5

Operation

The cooling process starts at the compressor where the refrigerant is in a gaseous form The function of the compressor is to push the refrigerant, under pressure through the entire system .As the gas enters the Condenser heat is drawn from the refrigerant causes it to condense into a liquids. Because of the Compressor the liquid is underpressure.

The pressurized liquid is then metered into tiny droplets by an Expansion valve. Because of the change in form the pressure past the Expansion valve is lowered. The droplets then enter the Evaporator, where they draw heat from the air and then change into a gas. As a result of heat being drawn from the air temperature of the air is decreased. It is this cooler air that is introduced to the cabin forcooling.

Vapor cycle refrigeration system has a high pressure section from the compressor to the thermal expansion valve and a low pressure section from the thermal expansion valve to the inlet side of the compressor. The high pressure section is commonly referred to as the High side and the low pressure section is referred to as the Lowside.

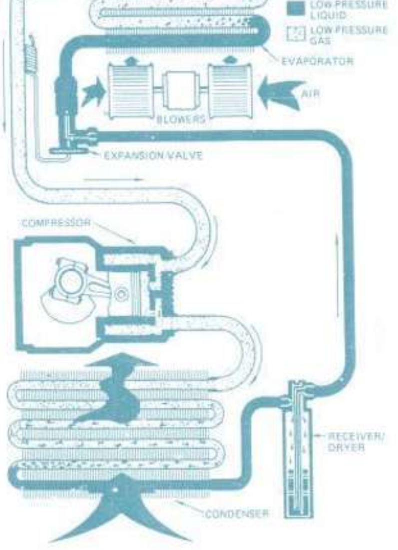

4.6 Vapor-cycle coolingsystem

Servicing of VCM

Servicing of a vapor-cycle refrigeration system requires the use of a service manifold, which makes it possible to plug in to the system as required to test pressure add refrigerant and purge evacuate and recharge the system.The service manifold usually has a high pressure gauge which should have a capacity of as high as 500 psig. And a compound low pressure gauge, which can provide readings ranging from 30hgThe manifold also includes three fittings one for the low side one for the high side and one by which refrigerant may be added or evacuated.

Vapor cycle system are provided with service valves to which the service manifold can be connected .These valves may be of the Schrader type or some other type.

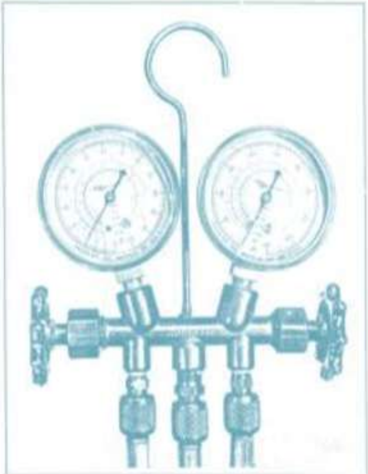

4.7 A manifold Set Purging

When it becomes necessary to change a unit in a vapor cycle refrigeration system the refrigerant, must be released this is called purging the system.

The recommended procedure for purging the refrigeration system is first to connect the service manifold to the low side and high side service valves. The manifolds port should be connected to a vacuum pump connected to a closed container.

After the service manifold is connected to the system either one or both of the service valves are opened slightly with the vacuum pump on to allow a slow escape of the refrigerant into a closed container.

When both pressure gauges on the service manifold indicate zero pressure the system is purged and can be disassembled.

Vacuuming

After a system has been reassembled and is once again a closed sealed system it must be evacuated with a suitable vacuum pump. The vacuum pump is connected to the center fitting of the service manifold.The manual valve on the manifold are opened and the pump is started. The reason for evacuation of the system is that all air and attendant moisture must be removed from the system. As pressure decreases below atmospheric the boiling point of water decreases .It is recommended that the pressure of the system be reduce to -29.0 in hg that is below standard sea level pressure.

Usually about 30 min with a good vacuum pump is required to pump down the system to the desired level.

Charging

With the system still under vacuum from the evacuation process both valves should be closed on the manifold set and the refrigerant source connected to the center hose. The high side valve is then opened and the low side gauge observed. As refrigerant flows into the system the low side gauge should come out of a vacuum indicating that the system is clear of any blockage and is taking the charge ofrefrigerant.

The system should be charged with as many pounds of refrigerant as called for by the system specifications. A full charge will be indicted by the absence if a bubble in the sight glass in the receiver dryer .Usually an additional quarter or half pound of refrigerant is added after the bubbles stop .When the charge is completed the manifold valve is closed and performance tests performed.

Performance Test

A performance test is determined how well the system is functioning .Run the engine at approximately 1.250rpm. With the air-conditioning control ser for maximum cooling. Place a thermometer into the evaporator as near the coil as possible and then turn on the blower to low or medium speed.

After the system has operated for a few minutes. The low side gauge should read between 20and 30 psig, and the high side gauge should read in the range of 225 to 300 psig. The evaporator temperature should be somewhere around 400 to 500 Fahrenheit.

Checking Compressor Oil

In order to check the oil the system should be operated for at least fifteen minutes then completely emaciated. When there is no pressure in the system remove the oil filler plug from the compressor and use a special oil dipstick made according to drawings furnished by the air flame manufacturer. A range of oil level is indicated in the compressor service manual. And it should not be allowed to go below the maximum.

4.8 The correct amount of compressor oil is essential for proper functioning of thecompressor

Leak Detector

The most acceptable type of leak detector for aircraft air – conditioning servicing is an electronic oscillator that produces an audible tone. The presence of R-12 will cause the frequency to increase to a high –pitched squeal. This type of detector is recommended because it is both safe and sensitive .A good electronic leak detector can detect leaks as small as one half ounce per year.

Air Cycle Machine

Modern large turbine powered aircraft make use of air cycle machine to adjust the temperature of the air directed into the passenger and crew compartments of these large aircraftLarge aircraft utilize air cycle cooling because of its simplicity freedom from troubles and economy.In this system the refrigerant is Air.

Principle

The principle of cooling by means of a gas is rather simple. When a gas is compressed it becomes heated and when the pressure is reduced the gas become cooled.

In an air cycle system the air is continuously compressed and then cooled by means of heat exchangers through which ram air is passed then the pressure is reduced by passing the air through an expansion turbine .The air leaving the expansion turbine is at low pressure and low temperature .The cooled air is directed through ducting with control valves to regulate the amount of cooling air needed to produce the desired cabintemperature.

Operation

The turbine compressor unit by which air is cooled is called an AIR CYCLE MACHINE .Hot compressed air from the compressor of one of the turbine engines flows through the Primary heat exchanger. The heat exchanger is exposed to ram air which removes heat from the air. The cooled but still compressed air is then ducted to the compressor inlet of the ACM .The compressor further compresses the air and causes it to rise in temperature. This air is directed to the Secondary heat exchanger which being exposed to ram air removes heat from the compressed air. The compressed air is then directed to the Expansion turbine .The Expansion turbine absorbs energy from the air and utilizes this energy to drive the Compressor .As the air exits the Expansion turbine it enters a large chamber which allows the air to expand and causes a further reduction in the air temperature .Thus the air leaving the turbine is cooled by the loss of heat energy and by the expansion that takes place. The great reduction in temperature causes the moisture in the air to condense and this moisture is removed by means of a Water Separator. The dried cold air is then routed to ducting to be utilized as required to provide the desired temperature in the cabin.

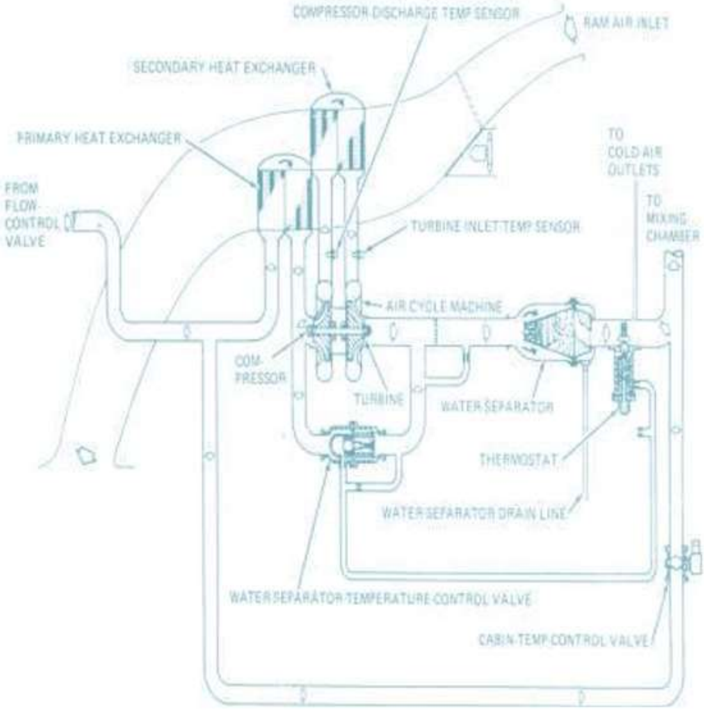

4.9 Air-cycle machine in a cooling system Pressurization

The purpose of aircraft cabin pressurization is to maintain a comfortable environment for aircraft occupants while allowing the aircraft to operate efficiently at high altitudes.

In order to make the cabin environment comfortable for theaircraft occupants the cabin must normally be pressurizedto maintain the cabin air pressure at the level reached at no higher than 8000 ft.

Along with allowing the aircraft and occupants to functionin efficient environments pressurization also permits the occupants to be insulated from the rapid changes in altitude associated with modern transportaircraft.

Aircraft and cabin altitudes and relative rates of change are shown in the flight profile in figure.

In order for an aircraft to be pressurized it must have enough structural strength in the pressurized section called the pressure vessel to withstand the operational stresses.

Cabin differential pressure is the difference in pressure between the ambient outside air pressure and the pressure inside the aircraft.

Light aircraft are generally designed to operate with a maximum cabin differential pressure of about3 to 5 psi. large reciprocation engine powered aircraft operate with a maximum differential of about 5.5 psi .Turbine powered transports are designed for a maximum differential pressure on the order of 9 psi.

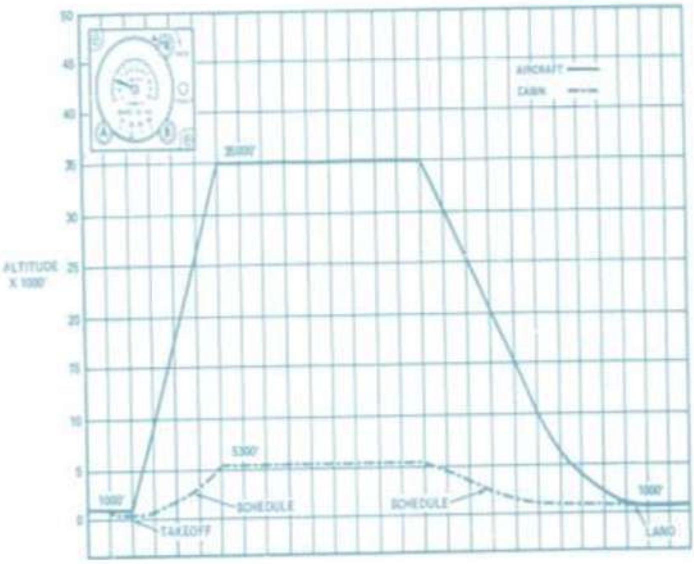

4.10 Comparison of aircraft and cabin altitudes during aflight in a pressurized aircraft

Sources of Pressurization

The sources of reassure for an aircraft vary depending on the type of engine being used and the design requirements of the aircraft manufacturer. In all cased the engine provides the power to pressurize the aircraft but the means of pressurization varies.

Supercharger

Is an engine driven air pump mechanically driven from the engine drive train which compresses air for use by the engine in the combustion process.

Turbocharger

A turbocharger is used in a similar manner as a supercharger except that the turbocharger is driven by exhaust gases from the engine, which drives an air compressor to supply an air charger to the engine.

Bleed Air

Aircraft using turbine engines usually make use of engine bleed air to pressurize the cabin .Bleed air is pressurized air that is bled from the compressor section of the turbineengine

Compressor

These pumps are driven from the engine accessory section or by turbine engine bleed air. Two types of pumps used are the Roots- type positive displacement pump and the Centrifugal cabin compressor.

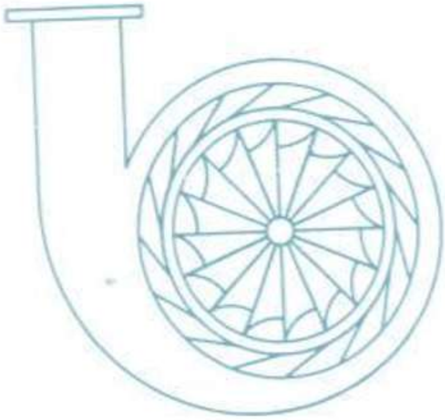

4.11 A Centrifugal Compressor

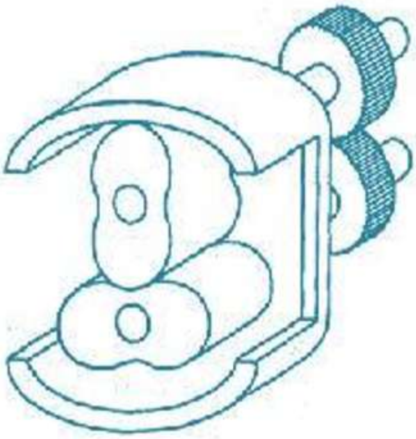

4.12 Schematic roots Type cabin compressor

Components

Pressurization Controller

The controller that operates the outflow valve is located on the flight desk and is used by the pilot to select the desired rate of cabin altitude change and the cabin pressure altitude. Thecabin pressure altitude pressure.
The principle of operation of a controller can best be understood by studying the operation of a manual controller .When it is desired to decrease the cabin altitude the manual control level is moved down.

This opens the cabin pressure port and allows cabin pressure to be applied to the reference chamber in the outflow valve. This pressure in combination with the spring in the outflow holds the outflow valve closed causing the cabin pressure to increase. The rate of airflow to the outflow valve is controlled by the manual rate control needle valve.If the pilot wishes to decrease the cabin pressure the control lever is moved upward and the vacuum port is opened to the line leading to the reference chamber. Pressure in the chamber is decreased and this causes the outflow valve poppet to open and release cabin pressure.

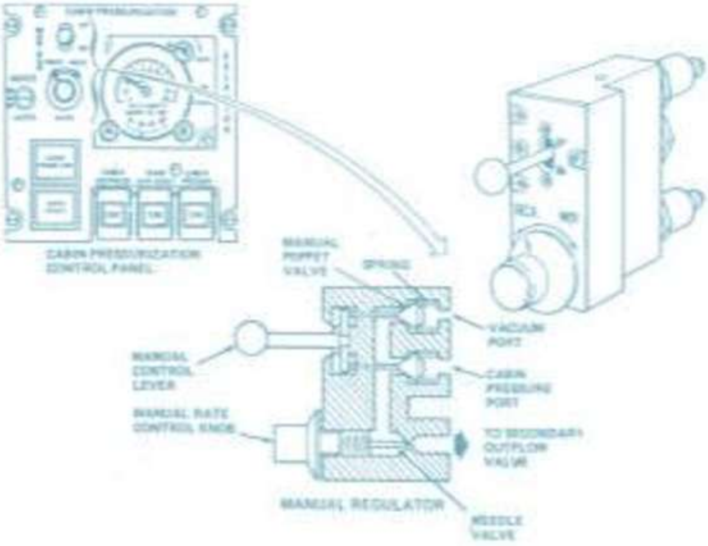

4.13A manual pressurization controller

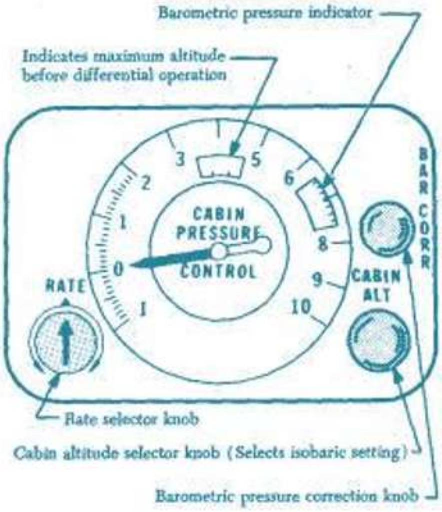

4.14

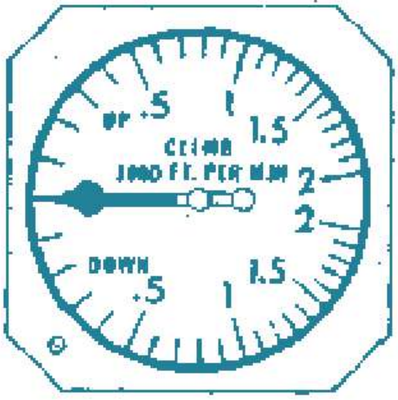

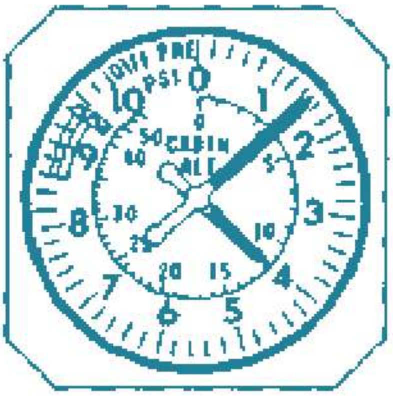

Outflow Valve

The outflow valve shown is used as the primary meansof controlling the cabin pressure .this valve controls the amount of air allowed to escape from the cabin. The outflow valve is controlled by the flight crew through the aircraft environment control panel.The outflow valve opens and closes to maintain the desired cabin pressure and in many systems operates to maintain a preset a preset maximum cabin altitude valve may be operated directly by pneumatic pressure or their operation may be by electric motors whose operation is controlled by pneumatic pressure.

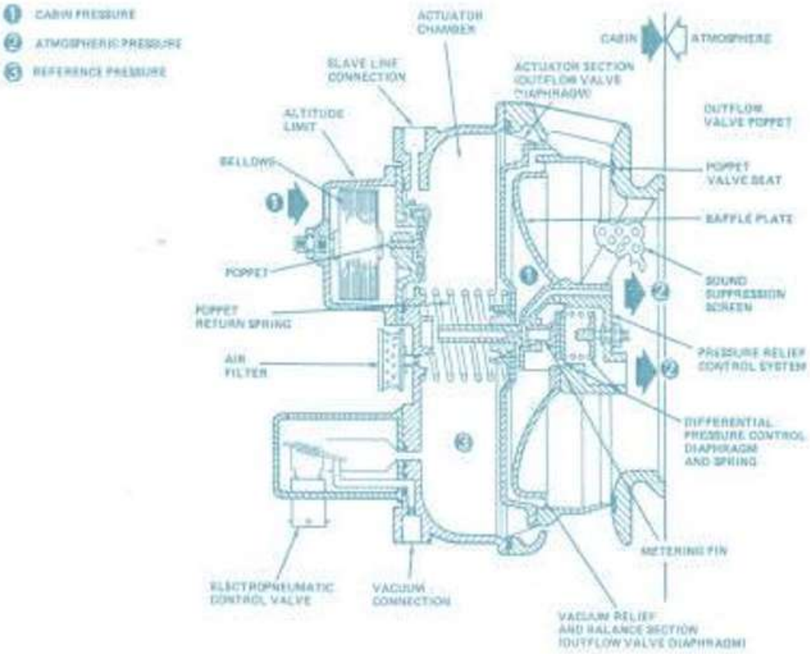

4.16 An outflow valve

Safety Valve

The safety valve also called a Positive pressure relief valve opens automatically and starts releasing cabin pressurization when its preset valve is reached. This preset valve is about 0.5 psi higher than the maximum setting of the outflow valve. The safety valve prevents the cabin from being over pressurized which could result in aircraft structural failure. Safety valve and the outflow valve are identical in design with the only differences being the maximum pressure setting and the pneumatic connections for operation.

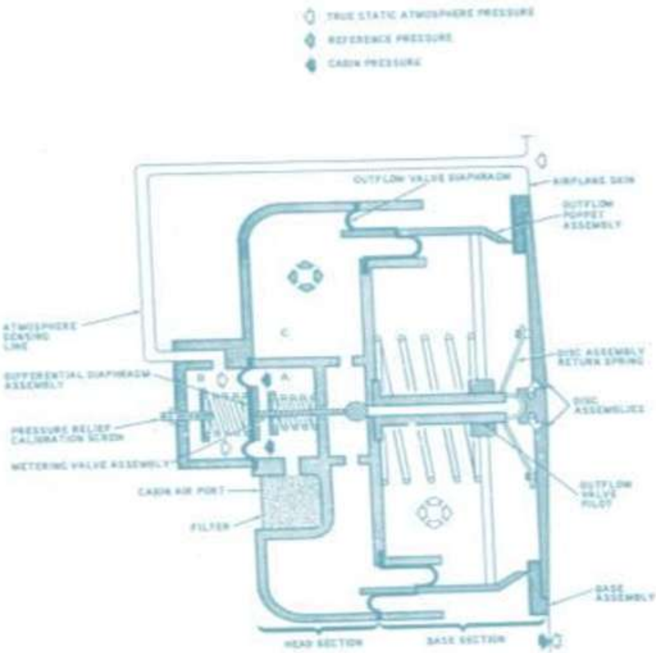

4.17 A safety valve

Negative Pressure Relief Valve

The negative pressure relief valve prevents the cabin from being at a higher altitude than the ambient air. The operation of this valve is automatic .It opens to equalize the cabin pressure exceeds cabin pressure by more than about 0.3psi

Dump Valve

A dump valve is used is used to release all cabin pressurization when the aircraft lands. This valve is commonly controlled by a landing gear squat switch.

Operation of Outflow

The outflow valve for a corporate jet aircraft is shown in figure. This valve is designed to serve as the outflow, valve altitude limiter and positive pressure relief valve for the aircraft. The outflow operation is controlled by the reference air pressure in the reference chamber bad is controlled through the electro pneumatic control valve from the pilot’s controller and the vacuum line. Airfrom out through the control valve to the controller. This keeps the reference chamber pressure below cabin pressure. When the controller is set to pressurize the canine the control valve is closed or only slightly open so that the pressure in the reference chamber is great enough to hold the poppet valve on its seat. Since no air can escape the cabin pressure increases. Once the cabin has reached the desired amount of pressurization the controllercommandsthecontrolvalvetoopenandreducesthe

reference chamber pressure. With the reduced reference pressure and spring pressure on the poppet valve .This opens the valve. This opens the valve enough to release air from thecabin.

Pressure Differential Operation

This consists of the differential pressure control diaphragm and spring the metering pin. Cabin air pressure between the baffle plate and the poppet valve is applied to one side of the differential pressure diaphragm .IF the force of this pressure exceeds that of the combined force of atmospheric pressure and the spring to the right of the diaphragm, the diaphragm moves to right an allows the metering pin to move off its seat. This allows air pressure in the reference chamber to escape through the passage now opened and causes the poppet valve to open. This lowers the cabin air pressure.The operation of this safety device isautomatic.

Altitude Limiter Operation

The cabin altitude is prevented from exceeding approximately 13000 ft by the altitude limit components of the valve. The altitude limit chamber on the upper the left is vented to cabin air pressure .As cabin pressure decreases the sealed bellows expands. If the cabin altitude exceeds the preset limit the bellows expands enough to press on the small poppet just to the right of thebellows
.This opens the reference chamber to cabin air pressure and cause the outflow valve to close. The valve remains closed as long as the cabin altitude is above the setting of the bellow.

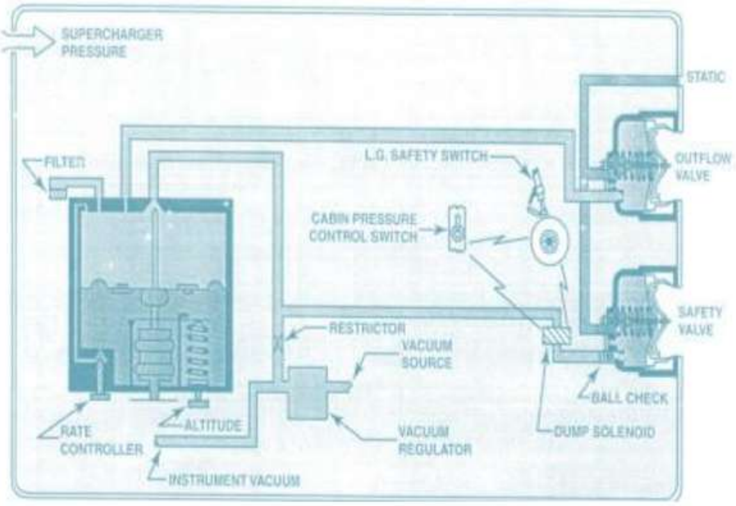

4.18 The cabin pressure is set at the control panel in the cockpit and controlled by the outflow valve. the safety vavle is similar to the outflow valve and fuctions as a backup for the outflow valve, and to dump pressurization when the wheels are on theground.

The avionics ventilation system is fully automatic. It cools the electrical and electronic components in the avionics compartment and on the flight deck, including the instrument and circuit breaker panels. It uses two electric fans to force the circulation of coolingair.

Whatever the configuration of the avionics ventilation system is, a part of the avionics ventilation airis sucked from the cockpit through the different cockpit panels.

MAIN COMPONENTS FANS

Two electric fans continuously circulate air around the avionics equipment, when the aircraft is electrically supplied.
The Fan Speed Controller (FSC) controls the avionics ventilation fan speed as a function of temperature:

1. High speed when the ventilation air temperature is above+40
°C (104 °F)
2. Lowspeedwhentheventilationairtemperatureisbelow+35
°C (95 °F)

SKIN AIR INLET AND OUTLET VALVES

These valves admit air from outside the aircraft and evacuate hot air from the avionics equipment.

SKIN EXCHANGE INLET AND OUTLET BYPASS VALVES

These valves enable air to circulate between the avionics bay and the space under the cargocompartment floor.

AIR CONDITIONING INLET VALVE

This valve opens to enable the air conditioning circuit to supply fresh air to the avionics bay.

SKIN EXCHANGEISOLATION VALVE

This valve connects or isolates the skin heat exchanger.

AVIONICS EQUIPMENT VENTILATION CONTROLLER (AEVC)

The AEVC controls the operation of all fans and valves in the avionics ventilation system.

NORMAL OPERATION, OPEN-CIRCUIT CONFIGURATION

GROUND OPERATIONS

The open-circuit configuration operates when skin temperature is above the on-ground threshold.
On-ground threshold = + 12 °C (53 °F), temperature increasing, or
+9 "C (48 °F), temperature decreasing.

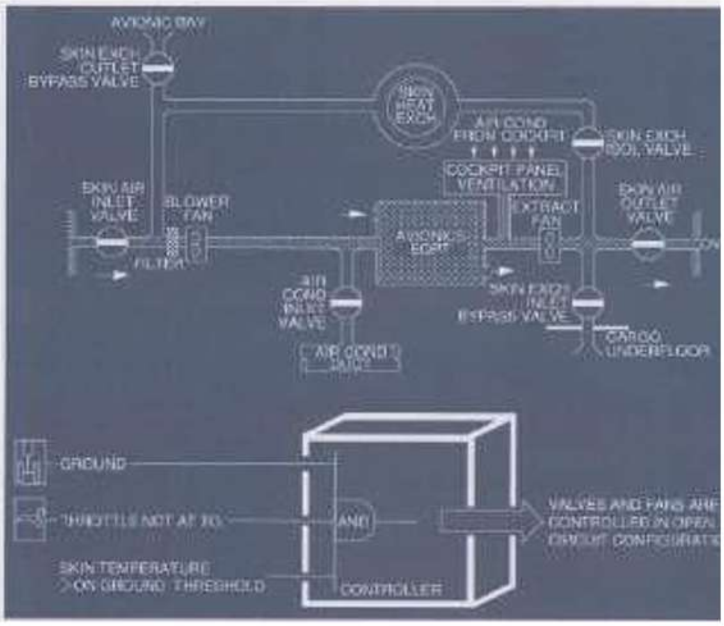

Note: In some cases, the opening of the skin air valves can be delayed even if the skin temperature is above the on-ground thresholds: This is to avoid condensation phenomenon when the temperature inside the avionic compartment is toocold.

Note: In some cases, the opening of the skin air valves can be delayed even if the skin temperature is above the on-ground thresholds: This is to avoid condensation phenomenon when the temperature inside the avionic compartment is toocold.

NORMAL OPERATION, CLOSE-CIRCUIT CONFIGURATION

FLIGHT OPERATIONS

The close-circuit configuration operates when skin temperature is beneath the in-flight threshold.
In flight threshold = +35 °C (95 °F), temperature increasing, or
+32 °C (90 °F), temperature decreasing.

GROUND OPERATIONS

The close-circuit configuration operates when skin temperature is beneath the on-ground threshold.
On ground threshold = + 12 °C (53 °F), temperature increasing, or
+9 °C (48 °F), temperature decreasing.

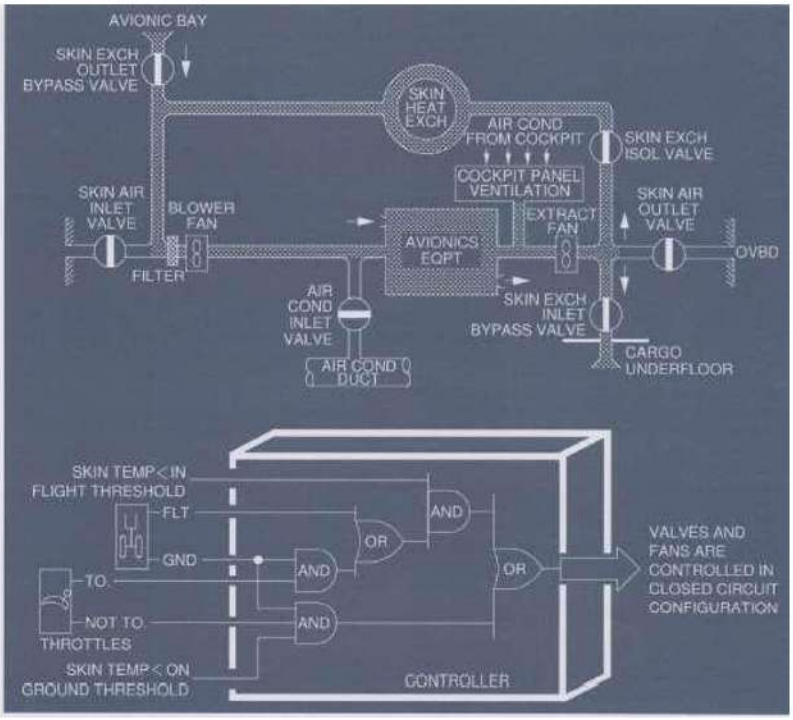

NORMAL OPERATION, CLOSE-CIRCUIT CONFIGURATION

FLIGHT OPERATIONS

The close-circuit configuration operates when skin temperature is beneath the in-flight threshold.
In flight threshold = +35 °C (95 °F), temperature increasing, or
+32 °C (90 °F), temperature decreasing.

GROUND OPERATIONS

The close-circuit configuration operates when skin temperature is beneath the on-ground threshold.
On ground threshold = +12 °C (53 °F), temperature increasing, or +9 °C (48 °F), temperaturedecreasing.

FLIGHT OPERATIONS

The intermediate configuration operates when skin temperature is above the in-flight threshold.
In flight threshold = +35 °C (95 °F), temperature increasing, or
+32 °C (90 °F), temperature decreasing.

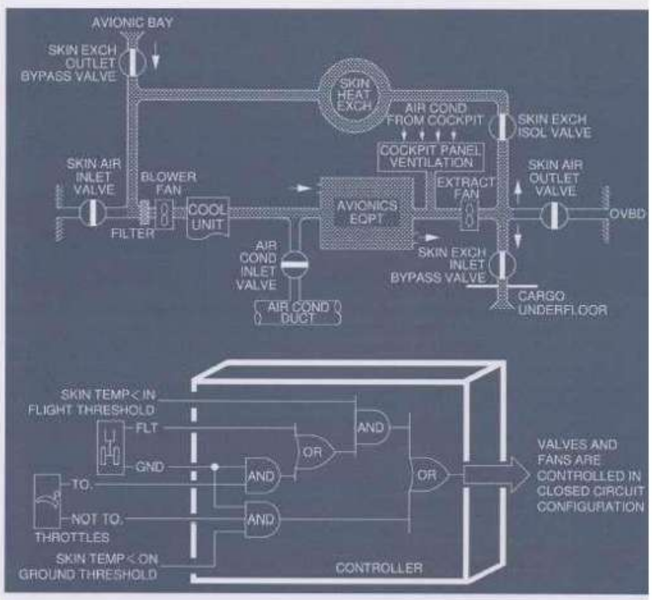

FLIGHT OPERATIONS

The intermediate configuration operates when skin temperature is above the in-flight threshold.
In flight threshold = +35 °C (95 °F), temperature increasing, or
+32 °C (90 °F), temperature decreasing.

Note: The measuring range of the skin temperature sensed is between -50 °C and BO °C.Outside of this range, the AEVC sets the avionics ventilation configuration to the intermediate configuration (partially open) until the temperature is within the operation range again.

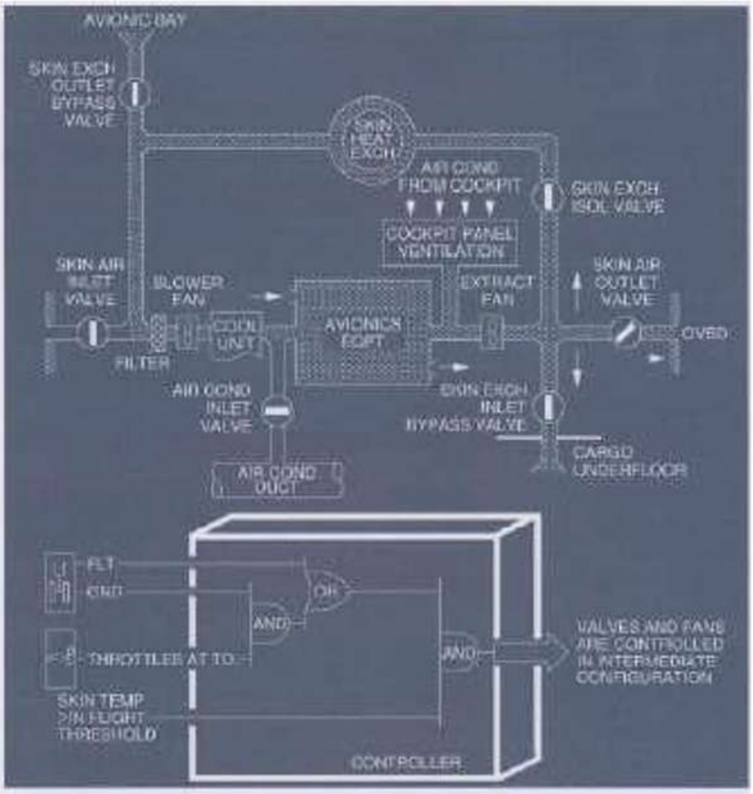

ABNORMALOPERATION

BLOWER FAULT OR EXTRACT FAULT ALERT

When the BLOWER or the EXTRACT pushbutton switch is set at the OVRD (override) position, the system is in closed-circuit configuration and adds air from the air conditioning system to the ventilation air.

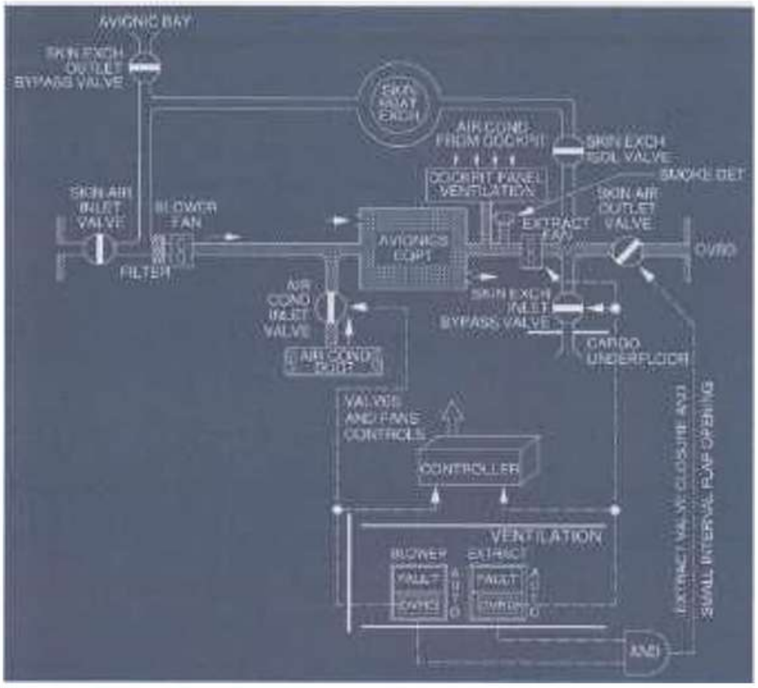

SMOKE CONFIGURATION

When the smoke detector detects smoke in the avionics ventilation air the BLOWER and theEXTRACT FAULT lights come on.

When both the BLOWER and the EXTRACT pushbuttons are set to the OVRD position, the air conditioning system supplies cooling air, which is then exhausted overboard. The blower fan stops.

LAVATORY AND GALLEY

An extraction fan draws ambient cabin air through the lavatories and galleys and exhausts it near the outflowvalve.

The extraction fan runs continually when electric power is available.

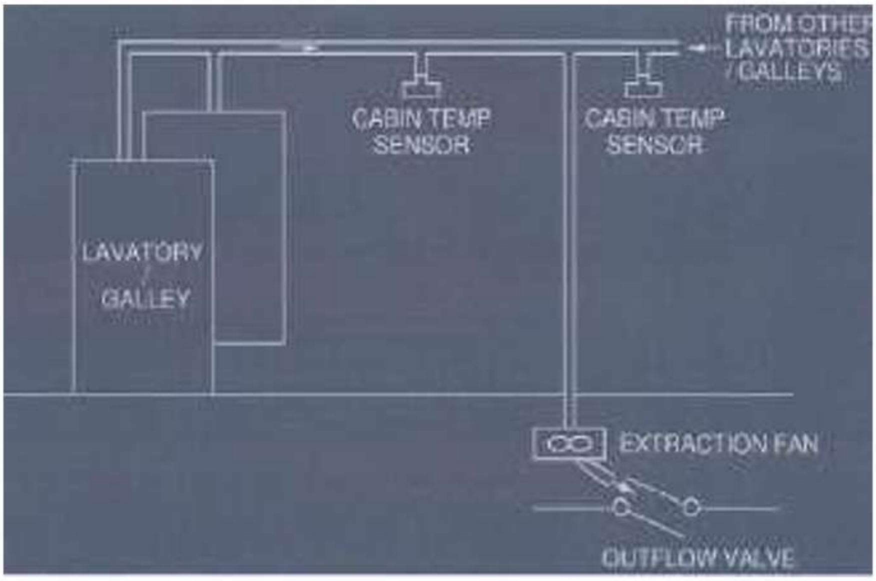

CARGO VENTILATION

An extraction fan draws air from forward cargo compartment or aft cargo compartment, and exhausts it overboard. Air from the cabin replaces the exhausted air, thus ventilating the cargo compartments.

CARGO TEMPERATURE REGULATION

The system can mix hot bleed air with the air coming from the cabin, therefore giving the flight crew control of the temperature in the forward or aft cargocompartment.

SCHEMATIC

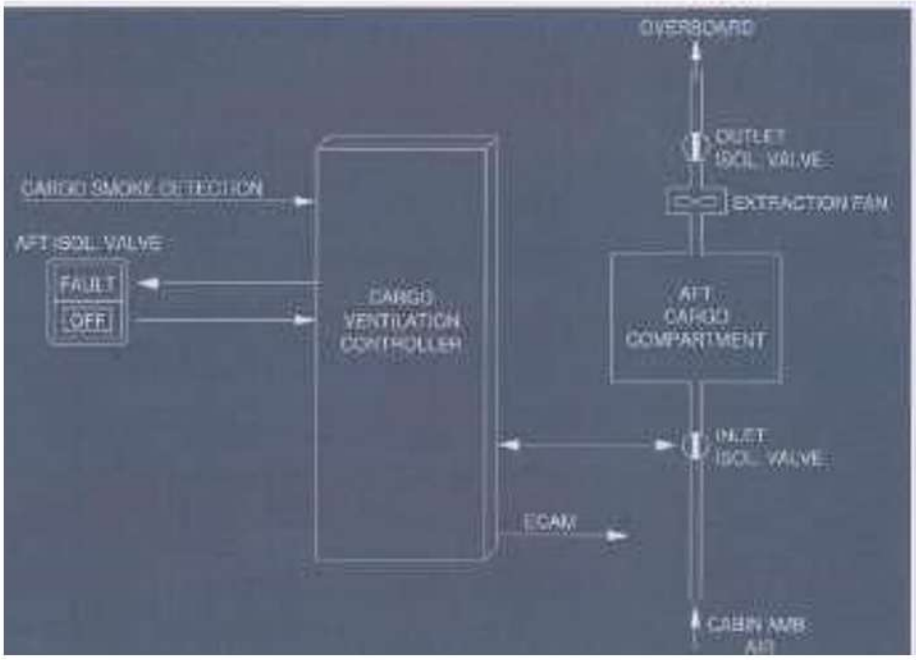

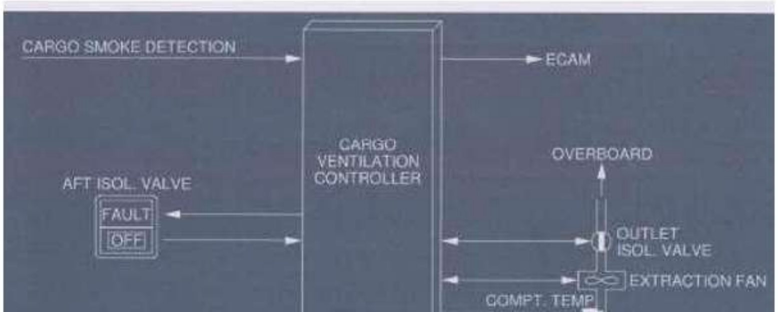

FWD CARGO VENTILATION

Air from the cabin goes via the inlet isolation valve to the forward cargo compartment, driven either by an extraction fan or by differential pressure in flight. A skin-mounted venturi discharges the air overboard via the outlet isolation valve. The cargo ventilation controller controls the operation of the inlet and outlet isolation valves and the extraction fan.

The ventilation system operates in two modes:

- On the ground or when P ≤ 1 PSI in flight, the controller opens the isolation valves, then starts the extractionfan
- In flight when P > 1 PSI, the controller stops the fan, and differential pressure maintains theventilation.

The controller closes the isolation valves and stops the extraction fan when:

- The flight crew sets the FWD ISOL VALVE pb-sw to OFF,or
- The forward cargo smoke detection unit detectssmoke.

The outlet valve closes and the extraction fan stops when the flight crew sets the DITCHING pb-sw toON.

AFT CARGO VENTILATION

Air from the cabin goes via the inlet isolation valve to the aft cargo compartment, driven by an extraction fan. Air is controlled by the outlet isolation valve and then goes outboard through the outflowvalve.

The cargo ventilation controller controls the operation of the inlet and outlet isolation valves and the extraction fan.

When the isolation valves are fully open, the extraction fan operates continuously when the aircraft ison the ground and duringflight

The controller closes the isolation valves and stops the extraction fan when:

- The flight crew sets the AFT ISOL VALVE pb-sw to OFF,or
- The aft cargo smoke detection unit detectssmoke.

PositionTransmitting

AC and DC Ratio Signals Introduction

An AC or DC ratio signal has a variable amplitude or level. A certain parameter controls the amplitude or level of such a signal. A device with a variable output level makes such a signal. The amplitude or level, changes under control of the parameter, between a high and a low level. These levels are different from device to device and dependonthedesignofthe device.

Potentiometers, synchros, RVDTs/LVDTs and rate generators are examples of devices that make AC or DC ratio signals. Parameters which control the output of these devices areforexamplespeed,angulardisplacement,etc.

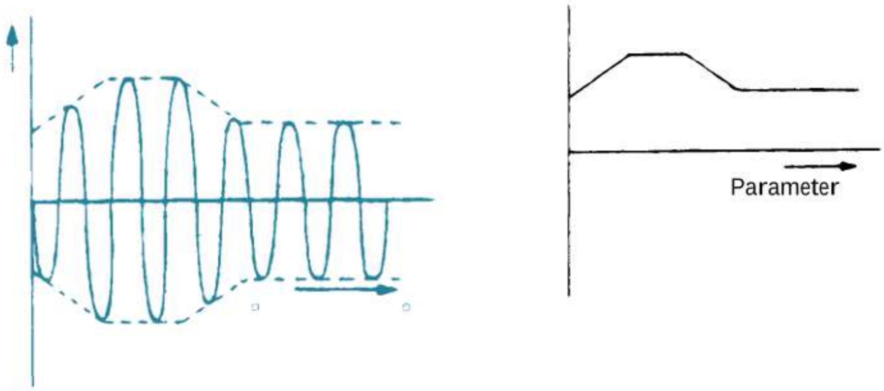

Figure 1: Amplitude depending of Parameter

Ratio System

Moving coil meter, servo systems, AC converters etc. are all devices that use ratio signals. Asimplewaytoshowthelevelloramplitudeofaratiosignaliswithamov-ingcoilmeter. This type of indicator has a low torque available to drive other systems. When other systemsneedmoretorque,aservosystemisabetterchoice.

Figure 2:

DC
Source
Indicating
AC Systemor
A/D Converter

Amplitude Amplitude

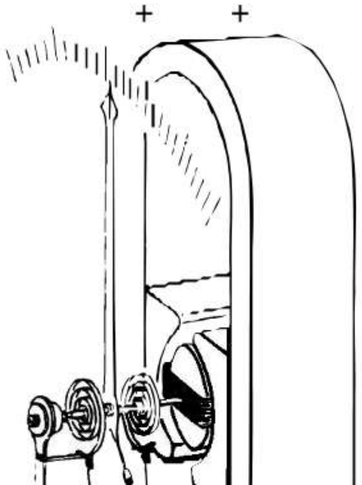

Figure 3: Analog Meter

- -

Parameter

AC DC

Variable Resistance Signals

A variable resistance signal is made by a device of which a certain parameter con- trols the resistance. The resistance varies between a high and a low value. These limits depend on the type and range of the resistor.

Parameters which control the resistance are, for example, temperature, rotation or pressure.

Resistance

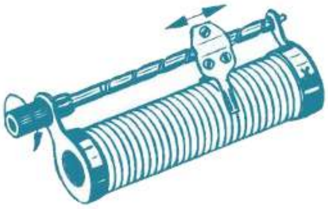

Figure 6: Potentiometer

Linear Potentiometer

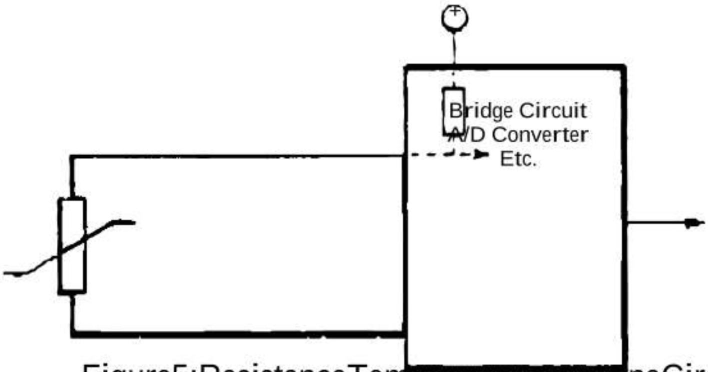

Figure5:ResistanceTemperatureSensorinaCircuit

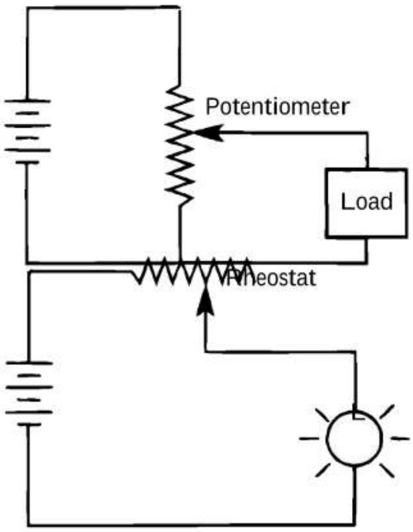

Figure7: Resistor, Rheostatand Potentiometer

Control Transformer

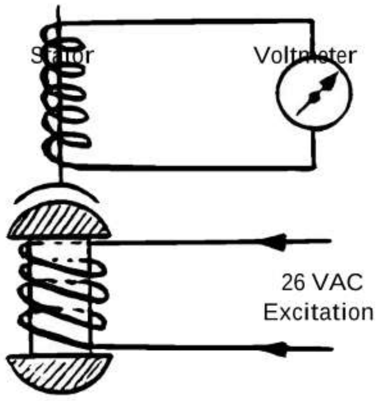

Figure 8:

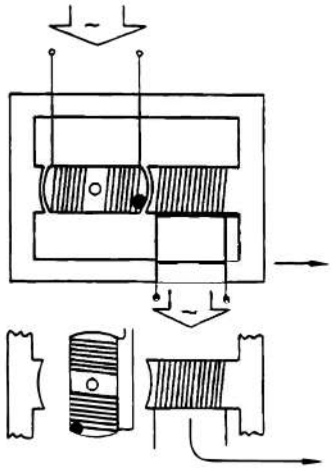

Figure 9: Output of a Control Transformer

A transformer consists of a primary and a secondary coil. The primary coil produc- es a continuously changing magnetic flux in the iron core. In the secondary coil the changing flux induces a alternating voltage.

a) TheprimarycoilexcitedbyU1isalignedwiththesecondarycoil.
OutputU2hasthesamephaseangleastheinputvoltage.
b) Theprimarycoilis90°clockwiserotated.Nomagneticfluxgoesthroughthe secondarycoil. Output U2 is null.
c) Theprimarycoilis180°intheoppositeofthefirstposition.
The phase angle of the output voltage is opposite of the input voltage.
d) Theprimarycoilis270°rotated.Theoutputisalsonull.

Control Transformer

Nomagneticfluxgoesthroughthesecondarycoil. d)
U2
Positions in between the 4 shown cardinal positions will change the amplitude of the output, not thephaseangle. t

Introduction

A typical synchro has a rotor and three stator coils. The coils in the stator are at 120degreeswithrespecttoeachother.Thisunitactslike3controltransformers containedinoneunit.

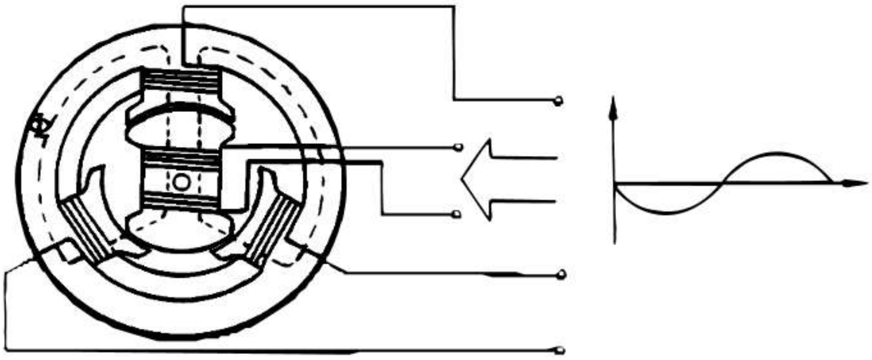

Figure 10:

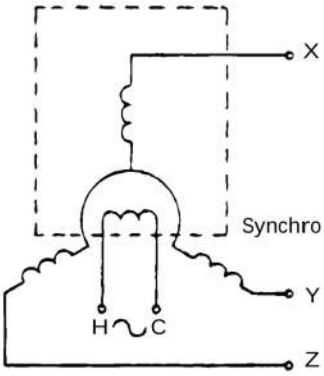

Synchro Principle

Synchros use 26 V AC or 115 V AC for excitation of the rotor. The excitation makes a magnetic field in the rotor coil. This magnetic field induces a voltage in the stator coils. The voltages in the stator coils are in-phase or 180 degrees out-of-phase with respect to each other. The voltage in the stator coils depends on the angle between the rotor coil and each stator coil. When we turn the rotor, the magnetic field in the stator also turns and the voltagesinthe statorcoilschange.

90˚Direct Torquer Systems

TheoutputsignalofasynchroisanACsignalwhichhasangularinformation.The synchro'swhichmakethesesignalsaresynchrotransmitters.

These transmitters are of the old multi-coil type or of the latest solid-state type. The

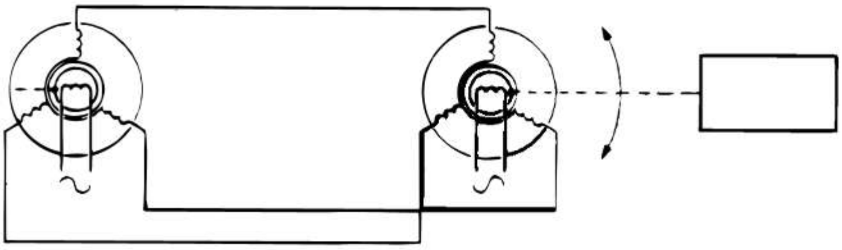

Figure 12:

Servo Systems

The rotor of a synchro receiver gives a limited torque for other systems. Whenthis torque is not high enoughwe have to use a servo system.
In a synchro-servo system the rotor of the synchro receiver gives a signal to a servo amplifier. In this system the rotor of the receiver is not connected to a supply sourcebut it makes a signal from the stator-field in the receiver synchro. The output signal of the servo amplifier drives a motor. The motor drives, via a reduction gear, the rotor of the synchro receiver anda load.
When the output signal of the rotor of the synchro receiver is not zero, the servo amplifier drives the motor. The motor adjusts the position of the rotor of the synchro receiver and the load until the output signal of this rotor is zero.This output signal is zero when the angle between the rotor and the stator field is 90degrees.

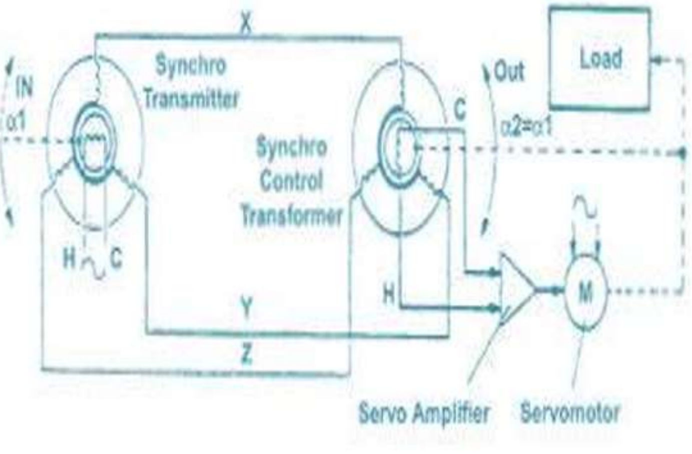

Differential Synchros

With a differential synchro it is possible to add or subtract angles. This synchro has three coils in the rotor and three coils in the stator at 120 degrees with respect to each other.
When the rotor of this synchro is turned toward left or right, it adds or subtractsthisanglefromtheanglethestatorfieldhasinthestator.

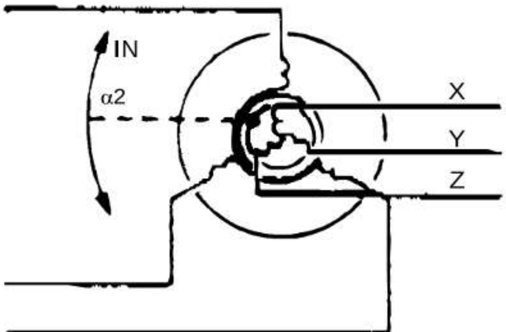

Figure 15: Symbol

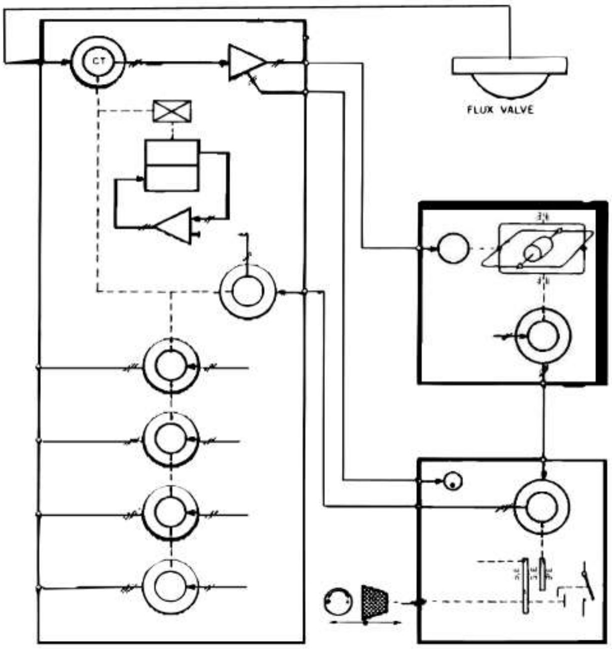

Figure 16: DS used to synchronize a Compass System

DS

Remote

The position of the directional gyro is transmitted via differential synchro to the master shaft. If the master shaft corresponds to the flux valve signal, the annunciator shows zero and the slaving is correct. If the difference of master shaft and earth magnetic field direction is to big, synchro-nizing takes to much time, so the pilot changes the DG output signal with the differential synchro to synchronize the compass manually, until the annunciator shows zero. In this case the DG will then maintain its own direction.

HDG Data Out 4

Resolvers
The resolver has two stator coils and a rotor coil. The two rotor coils and the two stator coils are at 90 degrees with respect to each other. A resolver makes from the signals in the stator coils sine and cosine signals.

Figure 17: Resolver

Figure 18: Sinus and Cosinus Signal depending of existing Angle

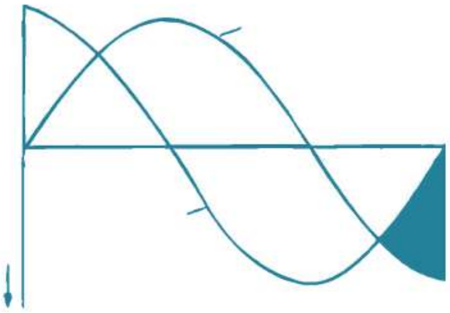

Figure 19: Resolver as Angular Transmitter

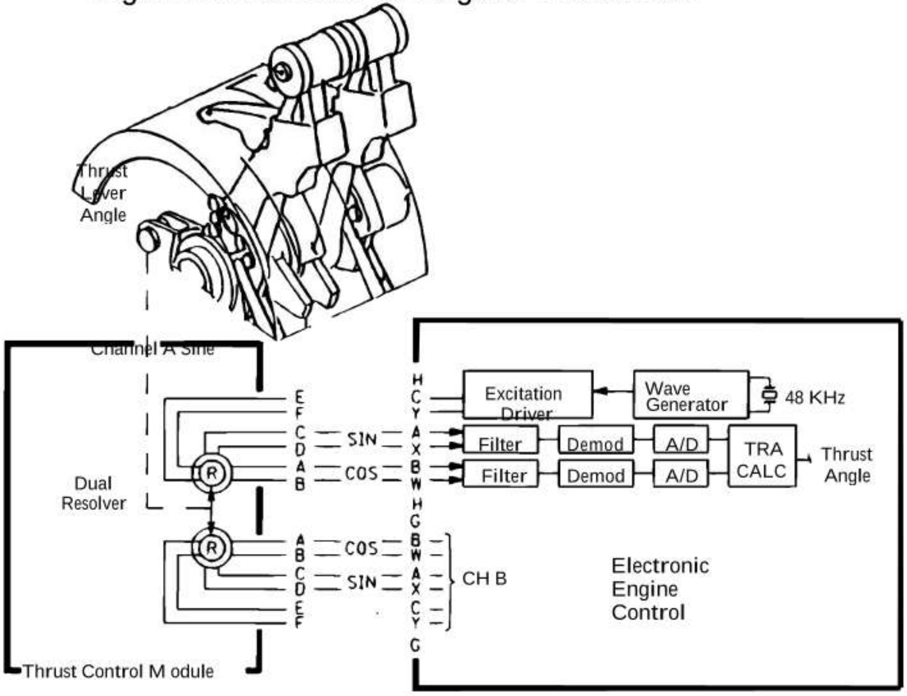

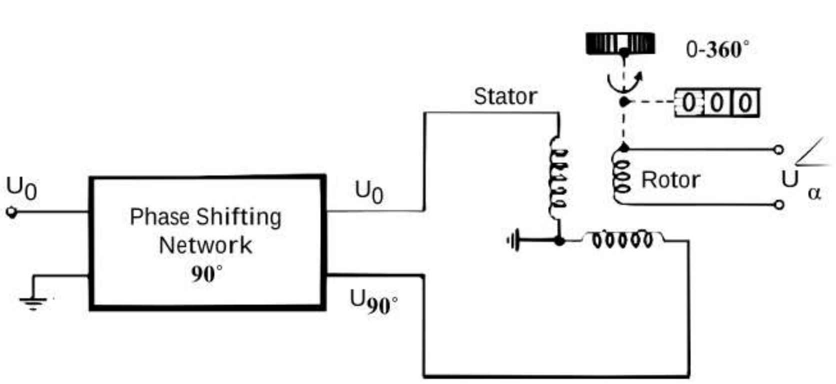

Figure 20: Resolver as Phase Angle Shifter 0 - 360° Phase Angle Selection α

Linear Variable Differential Transformer LVDTs

A transformer induces an output voltage in the secondary coil. According the direction of the windings, the phase angle is in (zero degr.) or opposite phase (180 degr.) The phaseanglecanbedeterminedwithdots.

Linear Variable Differential Transducers (LVDTs) change linear position information into electrical signals.

An LVDT has:

- one primarycoil,
- alinearmoveableironcoreand
- twoinserialconnectedsecondarycoils

The mechanical input changes the position of the iron core. The position of the core changes the magnetic coupling between the primary and the secondary coils. When the input moves the core in one direction, one of the secondary coils receives more magneticflux.Thisinducesahighervoltageinthecoil. The other secondary coil receives less magnetic flux. This induces a lower voltage. The difference between voltages induced in the secondary stator coils is proportional to the mechanical position.

A. The position of the iron core is centred. The magnetic field induced by primary coil is equallydividedbetweenthesecondarycoils.Thereforetheoutputvoltageiszero.

B. The iron core has moved upward. Now there is more coupling to the upper coil and less coupling to the lower coil. The output voltage increases and is in phase with the excitation.

C. The iron core has turned downward. No w there is more coupling to the lower coil and less coupling to the upper coil. The output voltage increases and is in opposite phase with theexcitation.

Figure 21: LVDT

Demodulation and Indication

The AC voltage from the LVDT is proportional of the deflection of the core and the phase is depending of the core direction. The signal must be phase-d ependant demodulated. (Synchron demodulator)

The amplified signal goes via electronic switch. This closes periodically by the positive phase of the reference voltage. With no input signal the indicator shows zero.

Figure 22: Neutral Position

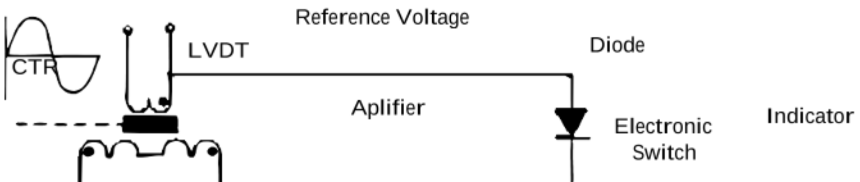

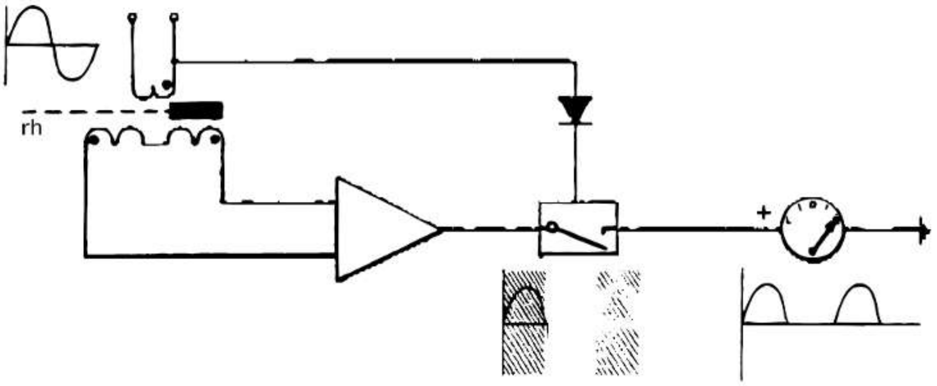

Whenthecoremovestotheright,thepositivesinewavepassesduringtransittimethe electronicswitch.Thepointeroftheinstrumentshowstotherightside.

Figure 24: Deflection toward left

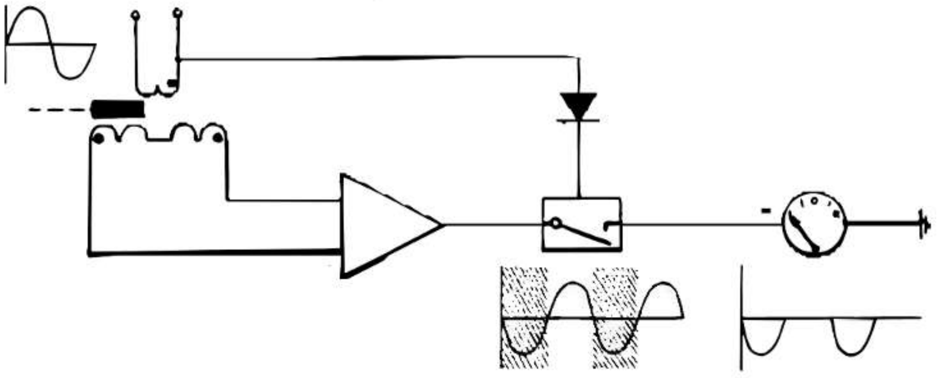

Whenthecoremovestotheleft,thenegativesinewavepassesduringtransittimethe electronicswitch.Thepointeroftheinstrumentshowstotheleftside.

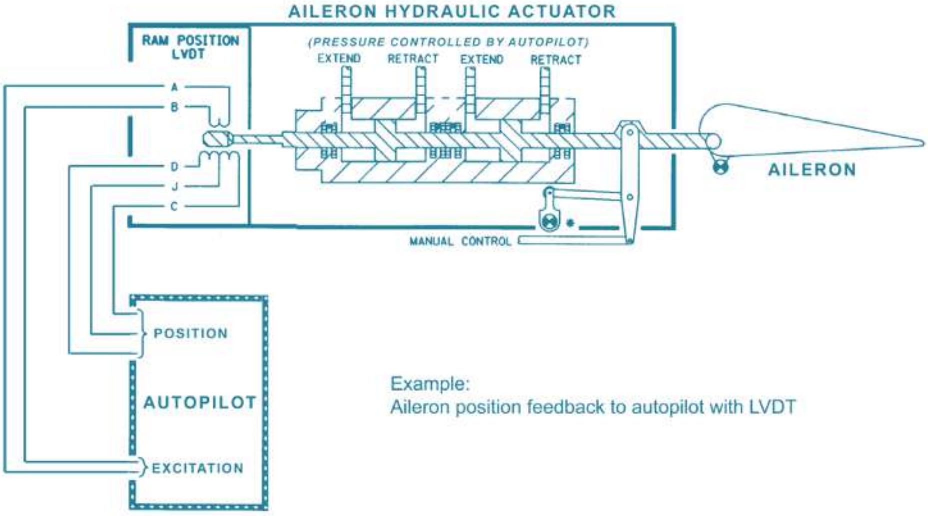

Example:
Aileron position feedback to autopilot with LVDT

Figure 25: Usage of LVDT

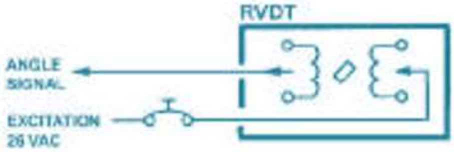

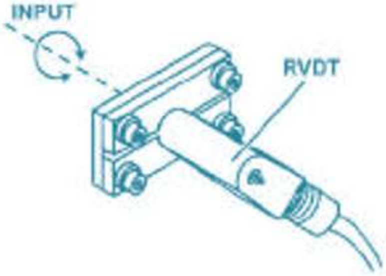

Rotary Variable Differential Transducers (RVDTs) change angular position information into electrical signals.

An RVDT has:

- a primary statorcoil
- an iron rotorcore
- two secondary statorcoils.

The mechanical input changes the position of the iron core. The position of the core changes the magnetic coupling between the primary and the secondary stator coils. When the input rotates, one of the secondary coils receives more magnetic flux. This inducesa highervoltageinthecoil.

The other secondary coil receives less magnetic flux. This induces a lower voltage. The difference between voltages induced in the secondary stator coils is proportional to the rotatedangle.ThisisanACRatioSignal.

The difference between rotation direction is that the output-voltage between R and T is of opposite phase. The output measured between R and T is an AC-RATIO signal which representstherotatedangleoftheRVDT.

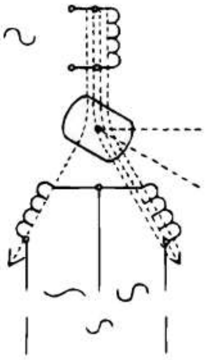

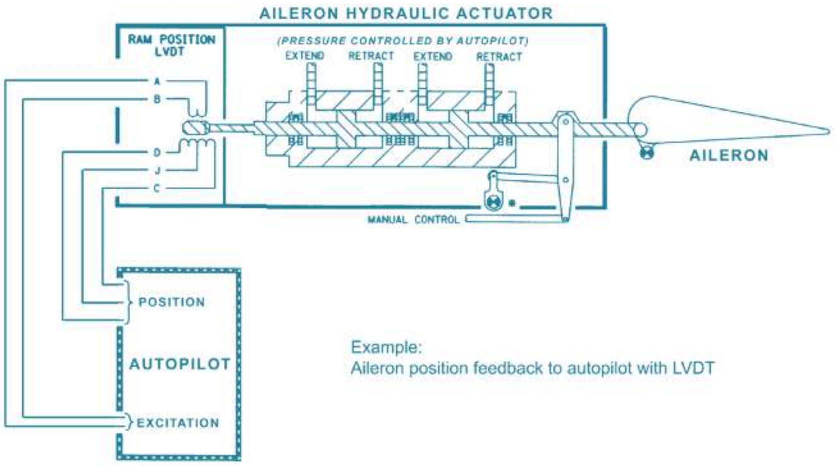

Example:
Aileron position feedback to autopilot with LVDT

Rotated clockwise: The iron core has turned clockwise. Now there is more coupling between L3 and L2, and less coupling between L3 and L1. The voltage between T and S increases and thevoltagebetweenRandSdecreases. Rotated counter clockwise: The iron core has turned counter-clockwise. Now there is more coupling between L3 and L1 and less coupling between L3 and L2. The volt- age between T and S decreases and the voltagebetween R and S increases.

Servo Motors and Tacho Rate Generators

Servo Loops

The DC servo motor loop is called a loop because of the closed nature of the sys- tem operation. The DC source is connected to the variable control potentio meter and to the follow-up potentiometer.
A servo amplifier amplifies the ratio signal and drives a motor with it. The motor drives a feedback device and a load. The signal from the feedback device also goes to the servo amplifier. The load is in the correct position when the difference between the ratio and the feedback signal iszero.

Servo Loop with DC Motor

Any time there is a difference between the two signals, the motor drives the load and feedback until both signals are equal. The polarity of the difference determines the direction of rotation.

Servo Loop with AC Motor

When we must have even more torque, it is better to use an AC motor. A chopper circuit makes AC from the DC signal. To drive the AC motor with this signal we need an extra amplifier. The rest of this system works like the DC servo system.

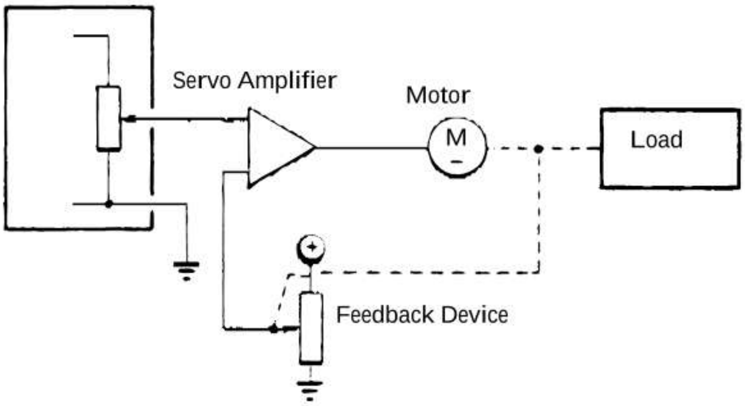

Figure 28: Servoloop with DC - Motor

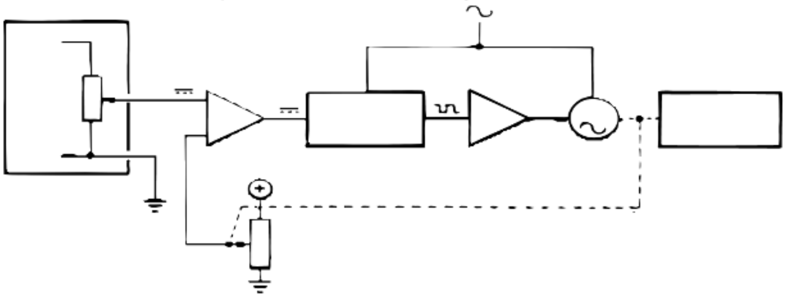

Figure 29: Servo Loop with AC – Motor

Feedback Device

Two Phase Servo Motor

The AC two-phase inductance motor servo motor. It may be very small or it may be quite powerful. The construction of the stator has two fields. These two fields are representedsymbolicallybytwocoilsdrawnatrightanglestoeachother.

Counter Clock Wise Rotation CCW

If a 400 Hertz voltage with a phase angle of 0° is connected to the variable field and an other 400 Hertz voltage with a phase angle of 90°. The resulting field rotates at 400 revolutions per second. A capacitor in series with the fixed field shifts the voltage 90° of the variable field.

Rotation of the magnetic field in the motor tends to drag the rotor after it in the same direction. How fast the motor moves depends upon its load and the strength of the magnetic field, which effectively is dependent upon the strength of the vari- able signal.

Clock Wise Rotation CW

The phase of the variable signal has been reversed. This reverses the direction of rotation of the resultant field. The direction of motor rotation depends upon the phase of the variable signal, and the speed of rotation depends upon its amplitude.

Braked

Often times it is desirable to apply an electrical brake to a two-phase servo motor This canbedonebydisconnectingeitherthevariablefieldorthefixedfield.Ifonlyone fieldis left operative, the motor does not rotate because the field does not ro- tate. This tends to holdthe rotorofthemotorinafixedposition.

Servo motor loop using a control synchro input

It is typical of many such loops used throughout aircraft systems. Whenever the amplifier sees a signal of a particular phase, it drives the motor in a particular di- rection until the synchro rotor comes to a particular null. A signal of opposite phase from the synchro rotor drives the servomotor in the opposite direction. The synchro rotor therefore alwaysisdriventoa particularnull.

The operating signal will come from some remote source whose mechanical posi- tion we want to duplicate in the operated item. For example, the remote source could be a directional gyro and the operated item could be a compass indicator.

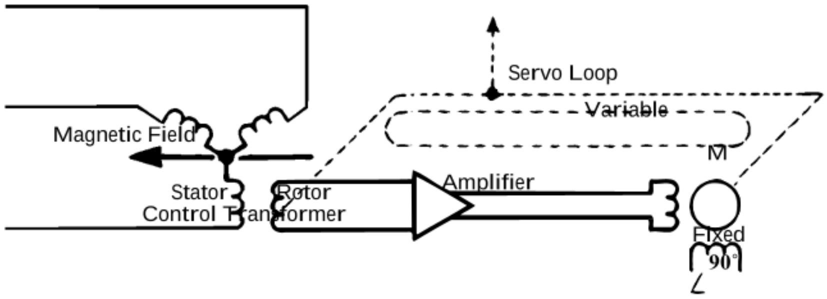

Figure 31: 2 Phase Motor in a Servo-Loop with Control Transformer

Operated Item

Tachometer / Rate Generator

Tachometer generator and rate generator are the same device. The output from a tachometer generator is in phase, or opposite phase angle with the excitation.

Tachometer not running

The powered fixed field is perpendicular to the variable field. The magnetic field is perpendicular to the variable field there is no transformer action and no signal out of the variable field winding.

Rotor turns in clockwise direction

The rotor as tending to drag the magnetic field along with it. A slow rate of movement of the rotor does not bend the magnetic field very much, whereas a greater rate of motion moves the field farther. The generated voltages increases in speed of the rotor.

A low rotor speed the small transformer coupling results in a small output voltage.

Example of a Servo Loop with Tacho Generator

The aircraft heading, represented by the angular position of the mastershaft, is send as heading signal to the control transformer. If the heading dial of the indicator does not correspond with the aircraft heading, an error signal results to the input of the amplifier. The command signal drives the motor. If the heading card position is identical with the aircraft heading, the error output of the control transformer goes to null, so the motor stops.

The tacho generator produces a signal proportional with the rotating speed of the motor with the heading dial. The rate feedback is opposite applied to the amplifier. This reduces the rotating speed of the indicator to prevent overshooting and oscillations when the scale reaches its final position.

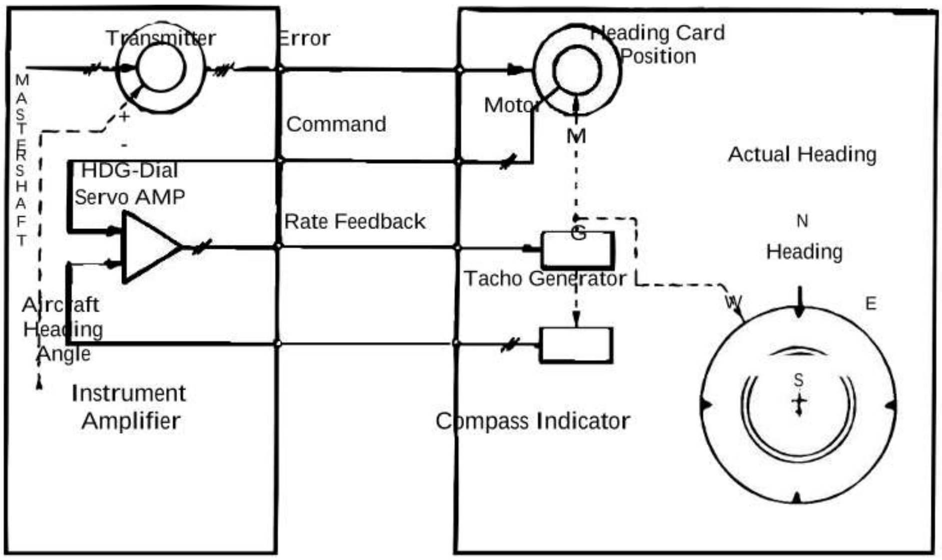

Figure 33: Heading Dial Servo Loop with Rate Feedback

At clockwise direction of rotation the output is a 400 Hz with a phase angle 180 degrees with a small voltage amplitude. Speeding up the rotor displaces the magnetic field farther away from perpendicular

, causing a larger voltage to appear at the output. The amplitude of the output is a direct function of the rotor speed

Rotor turns in counter clockwise direction

The field has been moved away from perpendicular in the opposite direction, and therefore the phase of the output is opposite. The output frequency is independent of rotation speed 400 Hz. One of the greatest uses of the rate generator is to provide inverse feedback sig- nals in servo motor systems for speed limiting and smoothing functions.

Another use is to provide rate signals

Pressure Measuring Instruments

Pressure is the amount of force acting on a given unit of area, and all pressure must be measured from some known reference. Absolute pressure is measured from zero pressure,oravacuum.Gagepressureismeasuredfromtheexistingat-mosphericpressure, anddifferentialpressure isthedifferencebetweentwopres-sures.

Absolute PressureInstruments

This instrument uses a sealed, evacuated, concentrically corrugated metal cap- sule as its pressure-sensitive mechanism. The concentric corrugations provide a degree of springiness that opposes the pressure of the air. As the air pressure in- creases, the thickness of the capsule decreases, and as the pressure decreases, the capsule expands. A rocking shaft, sector gear, and pinion multiply the change in dimension of the capsule and driveapointeracrossa calibrateddial.

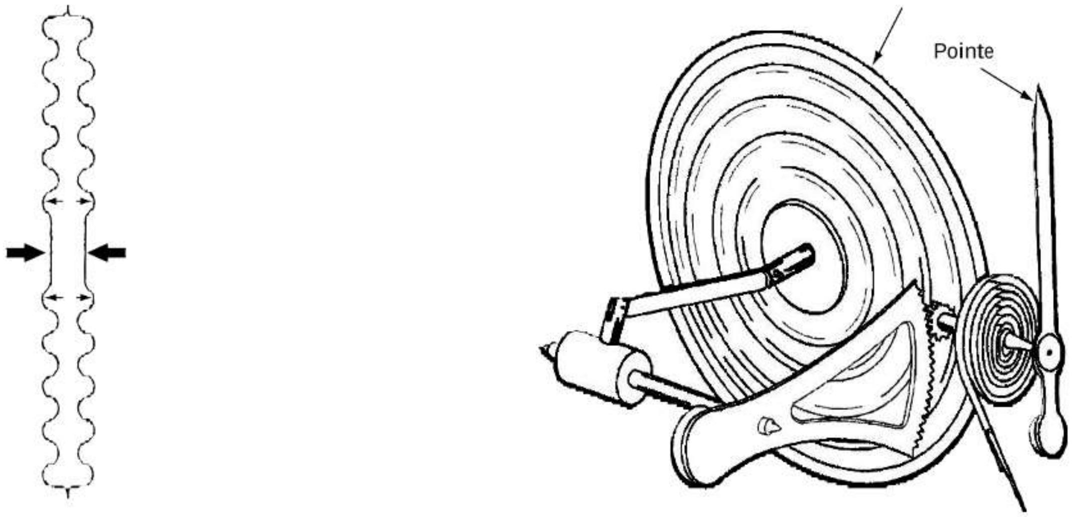

Figure 34: Aneroid

Aneroid Cham ber

Gage Pressure Instruments

Gage pressure is measured from the existing barometric pressure and is actually the pressure that has been added to a fluid.

Burdon Tube

A Bourdon tube is typically used to measure gage pressure. This tube is a flat- tened thin-wall bronze tube formed into a curve. One end of the tube is sealed and attached through a linkage to a sector gear. The other end is connected to the in- strument case through a fitting that allows the fluid to be measured to enter.

When the pressure of the fluid inside the tube increases, it tries to change the cross-sectionalshapeofthetubefromflatto round.Asthecrosssectionchanges,thecurvedtube tends to straighten out. This in turn moves the sector gear, which rotates the pinion gear on which the pointeris mounted. Bourdon tube instruments measure relatively high pressures like those in engine lubricating systems and hydraulic systems.

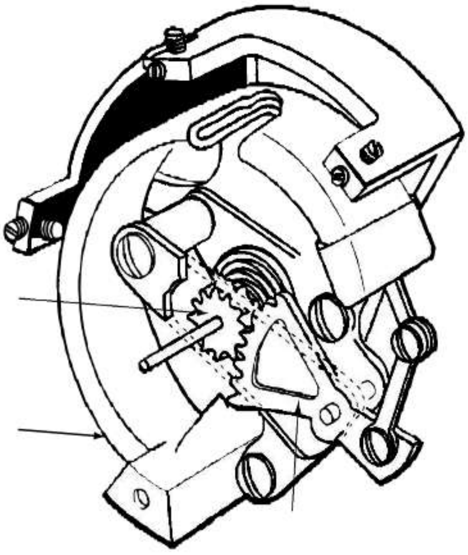

Figure 35: Burdon Tube

Bellows

Lo werpressures such as instrument air pressure, deicer air pressure, and suction are often measured with a bellows mechanism much like an aneroid capsule. The pressure to be measured is taken into the bellows. As the pressure increases, the bellows expands and its expansion rotates the rocking shaft and the sector gear. Movement of the sector gear rotates the pinion gear and the shaft on which the pointer ismounted.

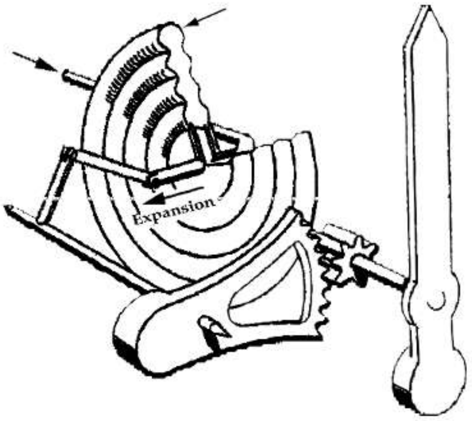

Figure 36: Bellow Mechanism and Instrument

Differential Pressure Instruments

A differential pressure is simply the difference between two pressures. A differen- tial bellows like that in the figure below is a popular instrument mechanism that can be used to measure absolute, differential, or gage pressure.

When used to measure differential pressure, as it is when used as a fuel pressure gage, one bellows senses the air pressure at the carburetor inlet, and the other bello wssenses the fuel pressure at the carburetor fuel inlet. A differential bellows can be used to measure gage pressure by leaving one of the bellows open to the atmosphere and the other connected to the pressure to bemeasured.

Figure 37: Differential Bellows with Indication Mechanism

Strain Gages

This electric passive devicesare used to detect forces. The resistance of strain- gages varieswiththeforceappliedtoit.Themetallicwireconsistsofa chrome-nickelalloy. Thelengthandthediameterofthe conductorchangesasafunctionoftheforce.

Expanding force increases, shortening force decreases the resist- ance.

This sensors are used for different applications. Structure monitoring, force sen- sors, pressure transducers and weight measuring. Inside pressure sensors, the pressure affects is changed intoforce.

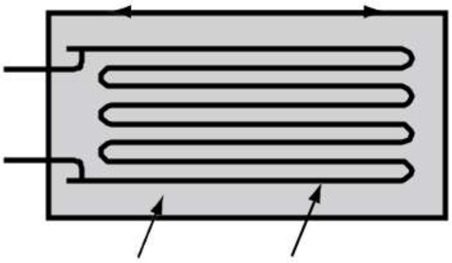

Figure 38: Strain Gage

Piezo-Resistive Sensors

P- or N- conducting elements are diffused into a pure silicon substrate. This so called piezo-resistive effect changes the resistance with a much higher sensitivity a metallic strain gagedoes.

Semiconductor based sensors in many different forms. The substrate of the pres- sure sensor shown

Figure 39: Pressure Indication using Strain Gage Bridge

below has a dimension of 3.5 x 3.5 mm Inside there is a bridge with 4 elements.

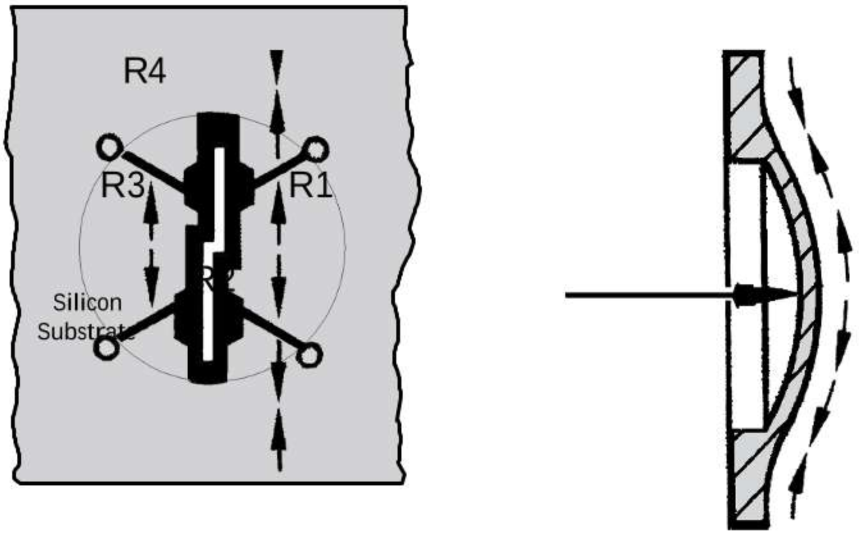

Figure 40: Piezo Resistive Element

Variable Frequency Signals

A variable frequency signal has a frequency which is controlled by a certain parameter. A device with a variable output frequency makes such a signal. The frequency varies, under control of the parameter, between a high and a low frequency. These limit frequencies are different from device to device and depend on the design of the device.

A control voltage, a variable capacitor, or a variable resistor are, for example, parameters that control the frequency.

Frequency counters, microprocessor system and special moving coil meters are all devices that work with variable frequency signals.

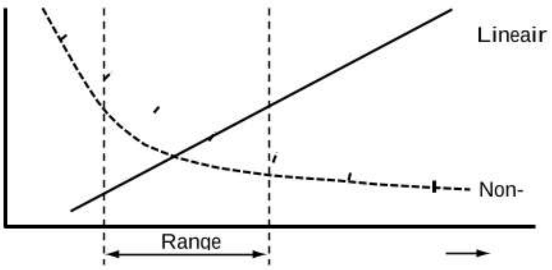

Figure 41: Linear Parameter Output after Conversion

This very sensitive and accurate pressure transducer is used inside airdata computers. The oscillator coil assembly oscillates the diaphragm. Its resonant frequency increases withtheappliedpressureagainstthevacuumreferenceinsidethe transducer.

The output frequency, proportional to the pressure is easily changed inside the computer, into a digital signal. The temperature sensing resistor compensates influences of the ambienttemperature.

Figure 42: Vibrating Diaphragm Transducer

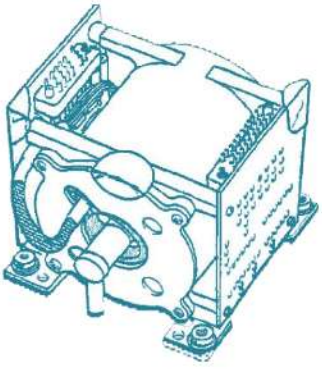

Temperature Indication

Temperature is one of the most important measurements in the aircraft operation. Operational temperatures range from well below freezing for outside air, fuel, oil, air-conditioning and pneumatic air to around 1000°C for exhaust gas temperatures.

Nonelectrical Temperature Measurements

Most solids, liquids, and gases change dimensions proportional to their temperature changes. These dimensional changes may be used to move pointers across a dial to indicate changes in temperature.

Bimetallic

Most small general aviation aircraft have an outside air temperature gage protruding through the windshield. This simple thermometer is made of strips of two metals having different coefficients of expansion welded together, side by side, and twisted into a helix, or spiral. When this bimetallic strip is heated, one strip expands more than the other and the spiral tries to straighten out. A pointer is attached to the metal strip in such a way that, as the temperature changes, the pointer moves

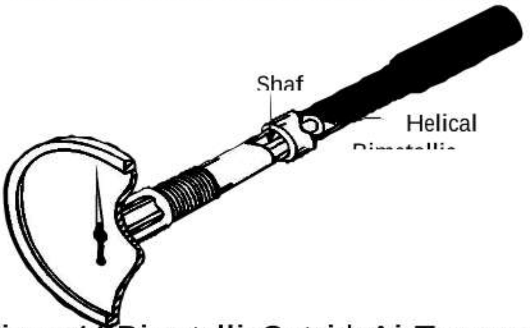

Figure44:BimetallicOutsideAirTemperatureIndication

Gas Expansion

Temperature is determined by measuring the pressure of the vapors above a highly volatile liquid. The vapor pressure varies directly as the temperature of the liquid.

Bourdon tube consists of a hollow brass or bronze elliptical-shaped tube formed into a semi-circle. One end of the tube is open and connected to the fluid to be measured. the opposite end of the tube is sealed. As pressure is applied, the elliptical tube changes shape and tends to straighten the semi-circle curve. The bourdon tube need to bee attached to a mechanical linkage and pointer to create a usefull instrument. Athin-wall,hollowmetalbulbisconnectedtoBourdontubebya capillarytube,thathasa verysmallinsidediameter.Thebulbisfilledwithavolatileliquidsuch-asme-thylchloride which has a high vapor pressure, and the entire bulb, capillary, and Bourdon tube are sealed as a unit. The bulb is placed where the temperature is to be measured and, as its temperature changes, the pressure of the vapors above the liquid changes. This pressure change is sensed by the Bourdon tube, which moves a pointer across a dial that is calibrated in degrees Fahrenheitor Celsius.

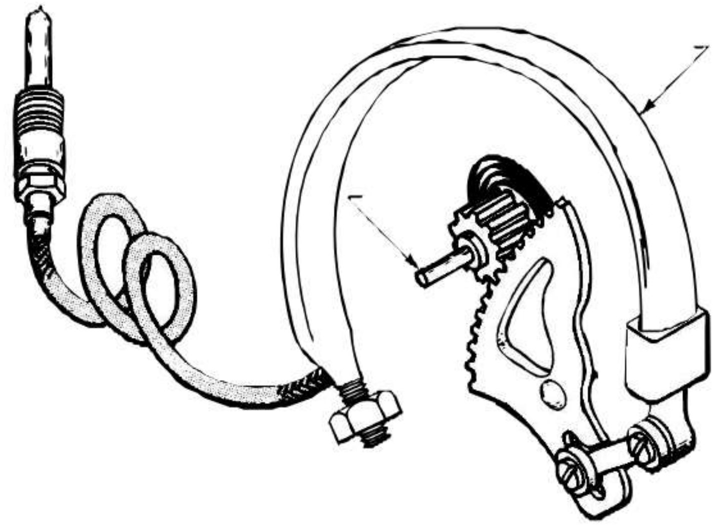

Figure 45: Remote Temperature Indication with Bourdon Tube

Temperature Dependant Resistors

The NTC (Negative Temperature Coefficient) resistor. It’s resistance decreases at increasing temperatures. So it is called: High temperature co nductor. (Heissleiter)

The PTC (Positive Temperature Coefficient) resistor. It’s resistance increases with increasing temperature. So it is called: Low temperature conductor: (Kaltleiter)

Figure 46: Resitanceverus Temperature

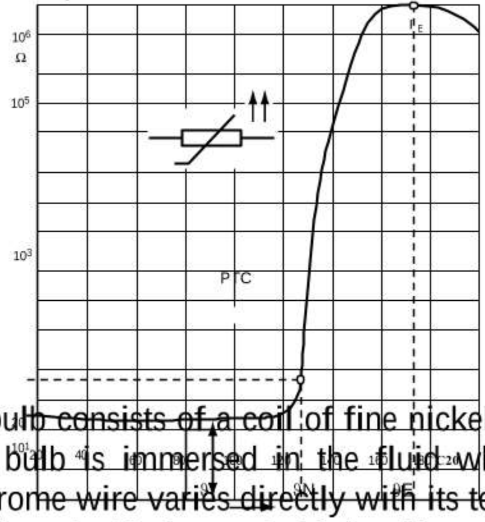

The temperature sensing bulb consists of a coil of fine nickel-chrome wire encased and sealed in a thin stainless steel tube. This bulb is immersed in the fluid whose temperature is being measured. The resistance of the nickel-chrome wire varies directly with its temperature. At the low endtemperature, the bulb resistance is ap- proximately 20 ohms, atitshighend,itsresistanceisabout200ohms.

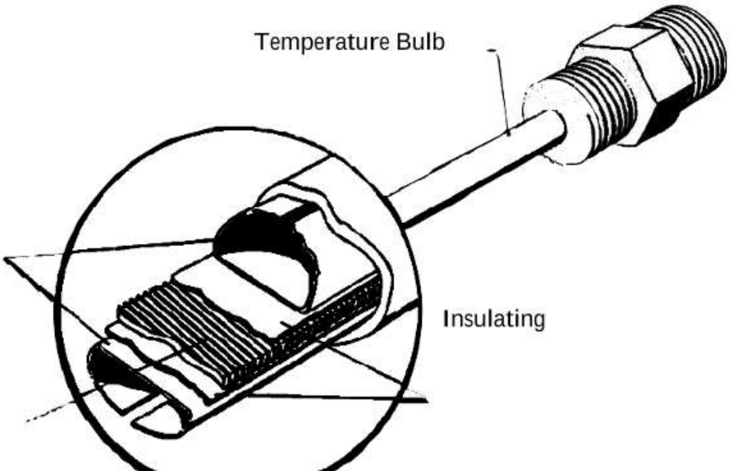

Figure 47: Resistance Temperature Bulb

Ratio Meter Circuits

The instrument uses two coils mounted on the indicator needle. When the temper- ature is low and the bulb resistance is low, more current flows through the coil 1 and the bulb than flows through coil 2 and resistor R1. The resulting magnetic field pulls the needle toward the low side of the dial. When the temperature is high and more current flows through coil 2 and R1 than coil 1 and the bulb, the needle .

Figure 48: Ratiometer with Moving Coil Instrument

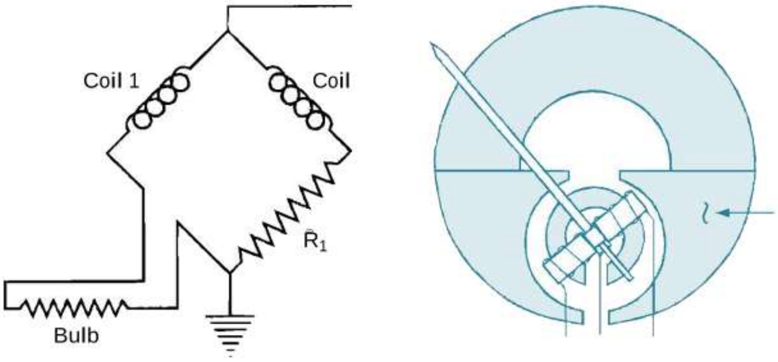

Bridge Circuits

(Wheatstone) Bridge circuits are a special type of complex circuit often used in electrical measuring and controlling devices. The figure below shows a typical bridge circuit used to measure temperature. Resistor R2 is a temperature probe. It resistance changesasitstemperaturechanges.

When the bridge is electrically powered, electrons finds two paththrough which they can flow. They can flow through resistors R1 and R2 or they can flow through resistors R3 andR4.

If the four resistors have values such that the ratio of the resistance R1 to R2 is the same as the ratio of R3 to R4, then the voltage at point C will be the same as the voltage at point

D. Becausethereisnovoltagedrop(novoltagedifference)across

the indicator, no current will flow through it. In this condition, the bridge is said to be balanced.

Resistor R2 is variable, and as it changes from the value that balanced the bridge, a voltage drop will be developed across the indicator that causes current to flow through it. As the resistanceofR2goesup,currentflowsCtoD.IfthevalueofR4

goesdownbelowthebalancevalue,currentflowsfromDtoC

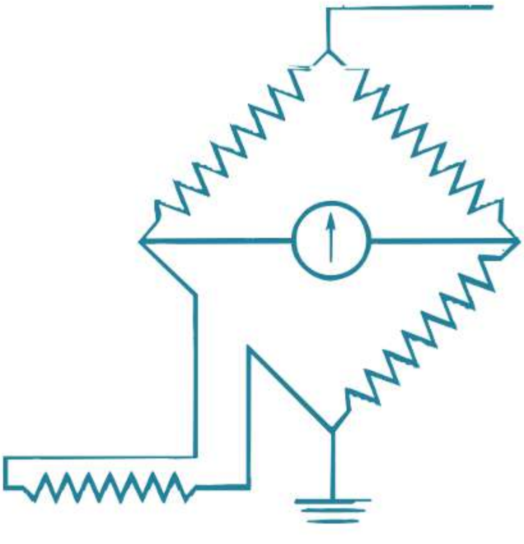

Figure 49: Wheatstone Bridge Circuit

Thermocouples
Highertemperatures,likethosefoundintheexhaustgasesofbothreciprocatingand turbineengines,aremeasuredwiththermocouples.

A thermocouple is a loop made of two different kinds of wire weldedtogetherat C one end to form a hot, ormeasuring junction. For examplechromel and alumel wires. The coil of current-measuring instrument is connected between the wires at the otherend to forma cold,orreferencejunction. The hot junction is held against the cylinder head in the spark plug gasket and a voltage is produced in the thermocouple whose amount is determined by the difference in temperaturebetweenthehotandcoldjunctions.Thisvoltagedifference causes a current to flow that is proportional to the temperature of the cylinder head.

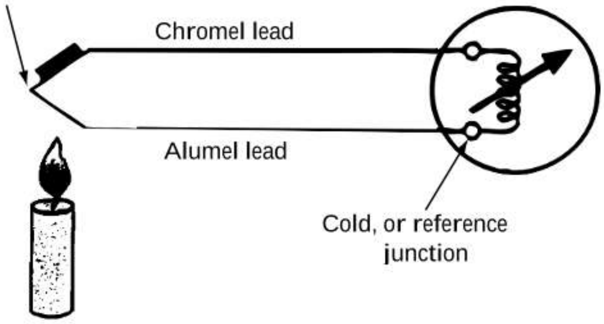

Figure 50: Thermo Couple Principle

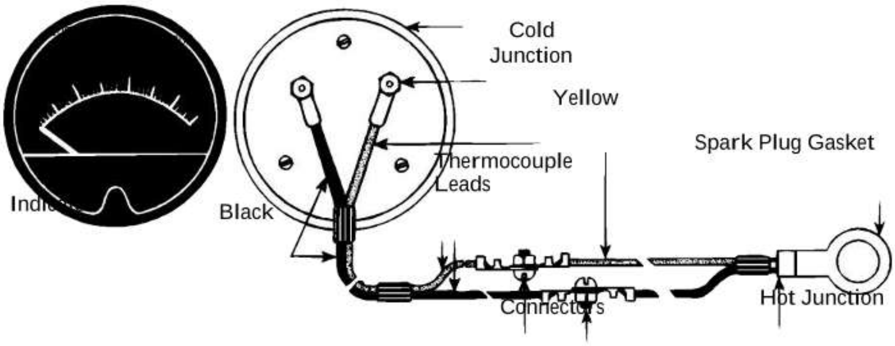

Figure 51: Cylinder Head Temperature (Spark plug gasket)

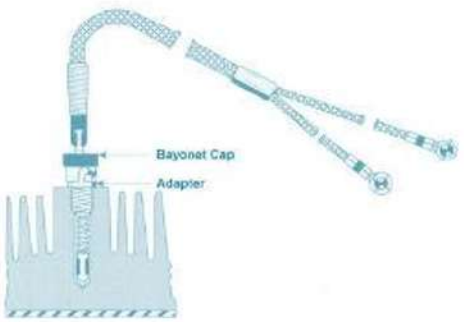

Figure 52: Thermo Couple (Bayonet Type for Cylinder Head)

Thermocouples for Jet Engines

The exhaust gas temperature EGT system for a turbine engine is similar to that for a reciprocating engine except that several thermocouples are used. These are arranged around the exhaust so they can sample the temperature in several locations.

For accurate temperature indication, the reference junction temperature must be held constant. This is not practical to do this in an aircraft instrument, so the indicator needle ismountedonabimetallichairspringinsuchawaythatitmovesback as the cockpit temperature increases. This compensates for reference junction

Small indicators operates without any additional electrical power except for the illumination. For more complex indicators, in example non linear scales, electrical power supply is used for the amplifiers and motors inside the indicator.

- Chromel(alloyofchromiumand nickel)
- Alumel(alloyofaluminiumandnickel)

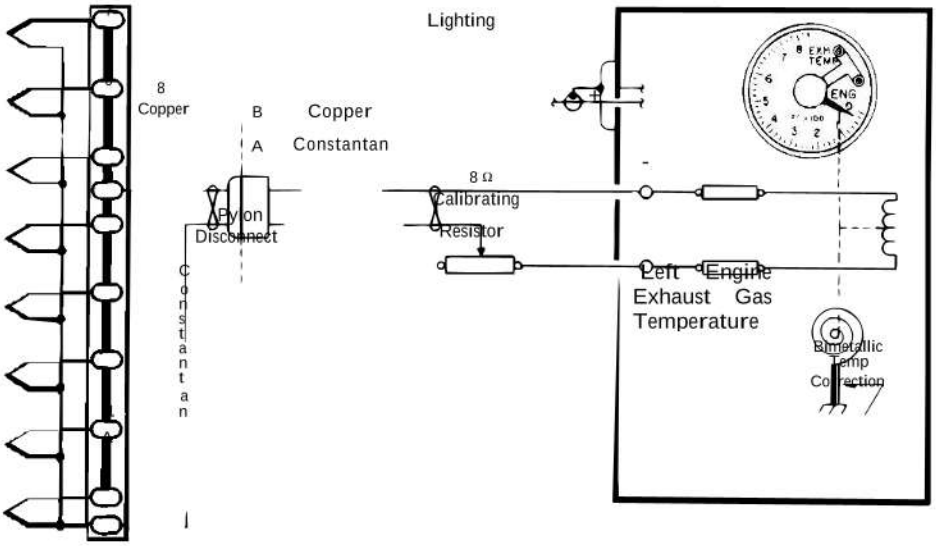

Figure53: EGT Indication(CopperConstantan)

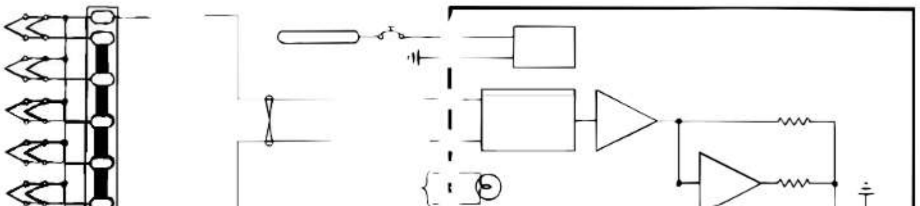

Figure 54: EGT Indication (ChromelAlumel)

Reference Junction
Quantity Indication System
DC Electrical Indicators

A common quantity indicating system for fuel and oil operates on direct current. These systems consists of a variable resistor as a tank unit or transmitter and a current measuring instrument as the indicator.

The tank unit consists of either a wire wound resistoror a segment of composition resistance material and a wiper arm driven by float moves across this resistance material tochangetheresistanceasa functionofthefuellevelinthetank.
The ratio meter-type minimizes the error that would be caused by variations in sys- tem voltage. Current flows through both coils and both the fixed resistor and the tank unit.

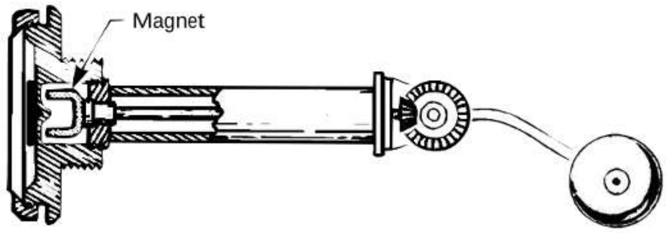

Figure 55: Variable Resistor and Permanent Magnet Rotor Indicator

This oil quantity transmitter is a variable reed switch type resistor. The reed switch operates by a magnet in a float. The current to the indicator is depending of the activatedresistorsintheprobe.
28 VCD

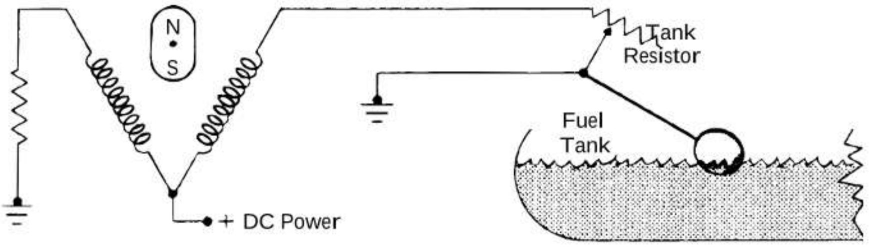

Figure 56: Mechanical Float Type Gauge

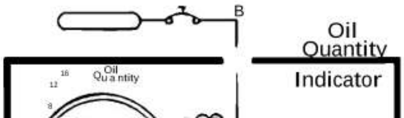

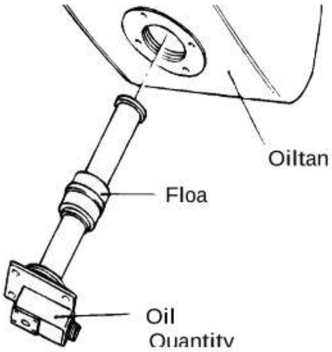

Figure 57: Probe with magnetic Float and Reed Switches

Capacitance Quantity System

Capacitance type fuel quantity measuring system that measures the mass of the fuel, rather than just its level in the tank. This is an electronic system that measures the capacitance of the probe, or probes, which serve as the tank sender units. A capacitor, can store electrical charges, and it consists of two conductors called plates separated by some form of dielectric or insulator. The capacity of a capac- itor depends upon three variables: the area of the plates, the separation between the plates, which is the thick-ness of the dielectric, and the dielectric constant of the material between the plates. The probes in a capacitance fuel quantity indicat- ingsystem are made of two concentric metal tubes which serve as the plates of the capacitor. The area of the plates is fixed, as well as the separation between them, so the only variable we have is the material which separates them.

These probes are installed so they cross the tank from top to bottom, and when the tank is empty, the plates are separated by air which has a dielectric constant of one. When the tank is full, the dielectric is fuel which has a constant of approx- imately two. In any condition between full and empty, part of the dielectric is air and part is fuel, and so the capacityoftheprobevariesaccordingtothelevelоffuelinthetank.

One of the big advantages of this system is that the probes can be tailored for tanks of all sizes and shapes, and all probes in the aircraft can be connected so the system integratestheiroutputtoshowthetotalamountoffuelonboard.

The dielectric constant of the fuel is approximately two, but it varies according to
its temperature and so a compensator is built into the bottom of one of the tank units. It is electrically in parallel with the probes and cancels the changes in dielectric constant as the temperature of the fuel changes.

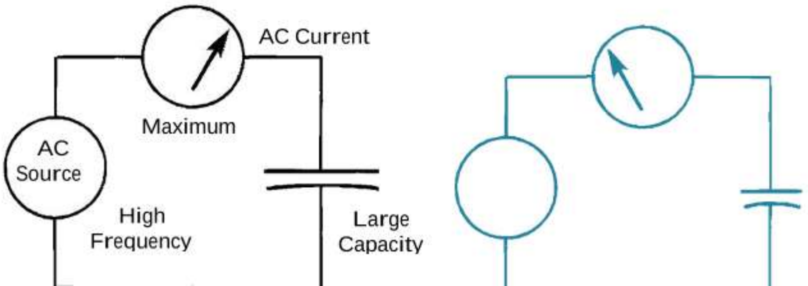

Figure 58: Capacitors Current depending on Frequency and Capacitance

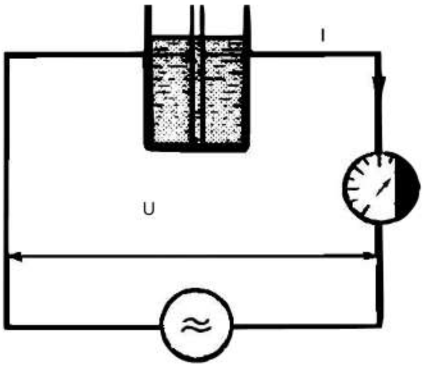

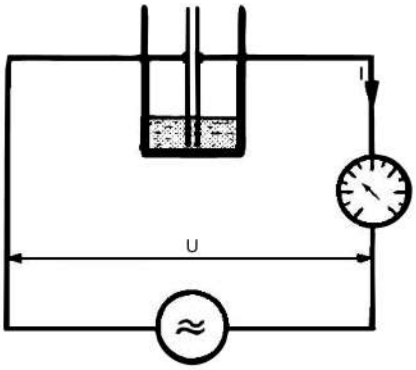

Figure59:CapacitorsCurrentdependingonLiquidLevel

Figure60:QuantityProbewithoutandwithCompensator

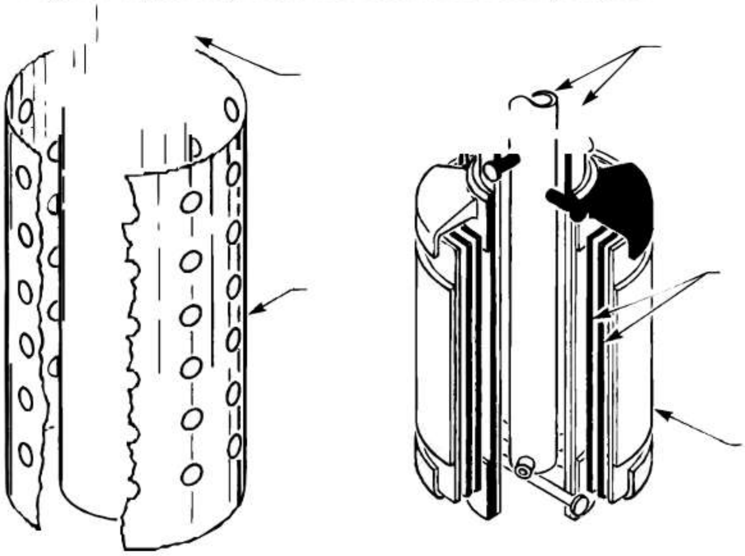

Capacitance Bridge

The entire system acts as a capacitance bridge. This is a balanced circuit consist- ingof transformer taps A-B and capacitor C1, the tank probe, balanced by trans- former taps B- C and the reference capacitor C2. When the impedance of the two halves of the bridge are equal, there is no flow through the indicator, but when the capacity of the tank unit changes,thebridgeunbalancesandtheindicatorshowstheamountofchange.

Quantity Indicator

The actual circuit is slightly more involved. The compensator is in parallel with the tank probe in one side of the bridge, between the amplifier and a tap on the empty calibrating potentiometer. This is all connected to one side of the power supply transformer secondary winding. The other half of the bridge receives its power through the full calibrating potentiometer. The capacitor in this half of the bridge is the reference capacitor inside the instrumentcase, and it is in parallel with a capacitor in the balancing circuit.

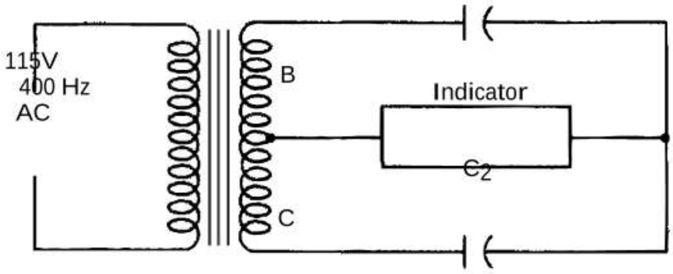

Figure 61: Capacitance Bridge

Whenthetankisfilled,thebridgeunbalancesandtheamplifiersensestheunbal-anced conditionandsendsasignaltothetwo-phaseservomotor.Thismotorcompares the signal from the amplifier with a reference signal taken from the primary ofthepowertransformer,andsincethetwosignalsareoutofphase,theservomo-torruns anddrivesbothabalancingpotentiometerandthepointeroftheindicator.

The balancing potentiometer changes the impedance of its half of the bridge until the bridge rebalances. When the bridge is balanced, the signal from the amplifier exactly cancels that from the transformer and the servo motor stops.The pointer indicates the number of pound or kilogrammes of fuel on board. As fuel is used from the tank, the capacitance of the tank unit changes again, unbalancing the bridge, theservomotorrunsuntilthebridgerebalancesandtheservomotorstops with the pointer again indicating the amount of fuel on board.

This system has a test feature: a test switch shorts out part of the inductance in one side of the bridge, this drives the indicator towards Empty. As soon the test switch is released,thepointergoesrightbacktothe correctindication.

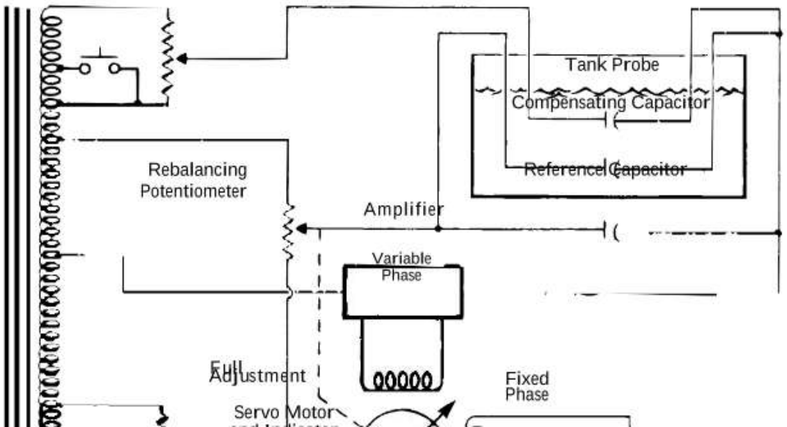

Figure 62: Quantity Indicator (Capacitance Bridge analog)

Calibration is done by a screwdriver adjustment to the Empty and Full calibration potentiometers. When the tank is empty, the Empty calibrating potentio meter is adjusted until the gauge reads Empty, then the tank is filled and the Full calibrating potentiometer is adjusted until the indicator reads Full.

Digital Fuel Quantity Indicating System

Todaythedigitaltechnologyisalsoincorporatedintoquantityindicatingsystem. Basicallythesystemusescapacitanceprobes.Theindicatingsystemconverts by processors the capacityinto fuel weight.

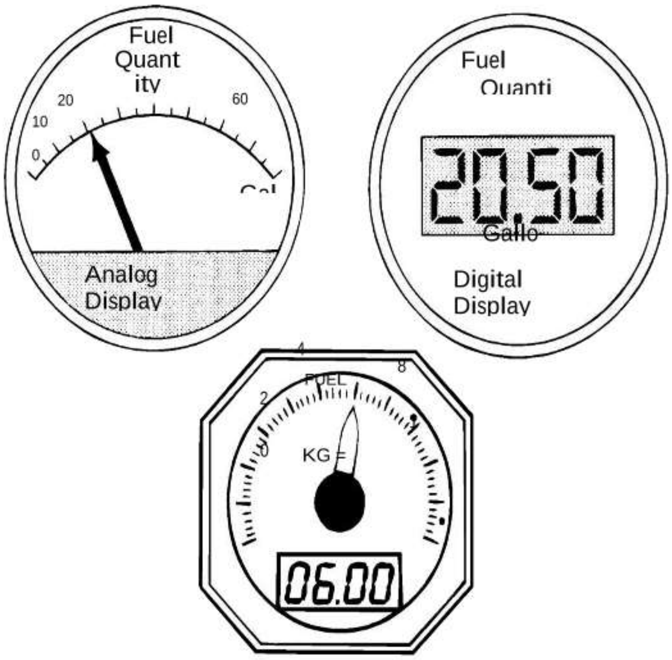

Figure 64: Probes and Digital Indicator with integrated Processor

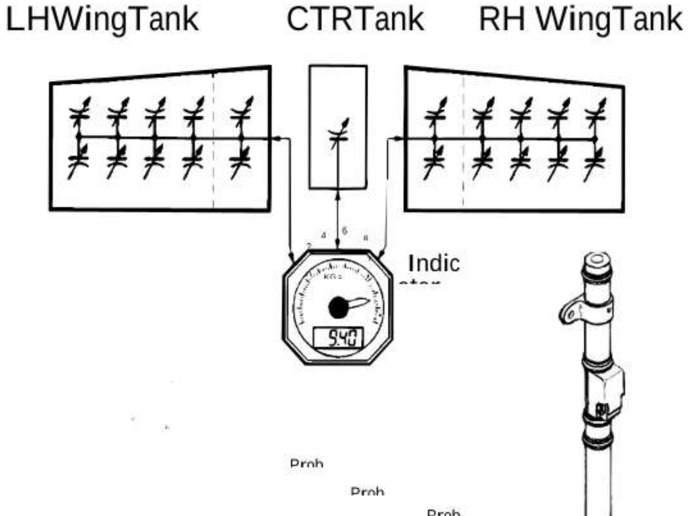

Digital Fuel Quantity Indication Circuit

The Indicator contains a power supply unit, a probe driver, a analog to digital con- verter and a processor unit. A combined digital read-out with analog pointer and scale eases a safe reading.

The probe driver sends a drive signal to the tank probes and compensator. For ex- ample with an excitation frequency of 1 kHz. Fuel quantity information comes back from the probes into the Indicator. The compensator senses the dielectric constant of the fuel used to calculate the fuel weight.

The analog signals coming from the probes and the compensator is converted to digital by the A/D-Converter. The processor calculates the fuel weight in kg. or lbs. to control the pointer and read-out.

Figure 65: Fuel Quantity Indicator (Digital)

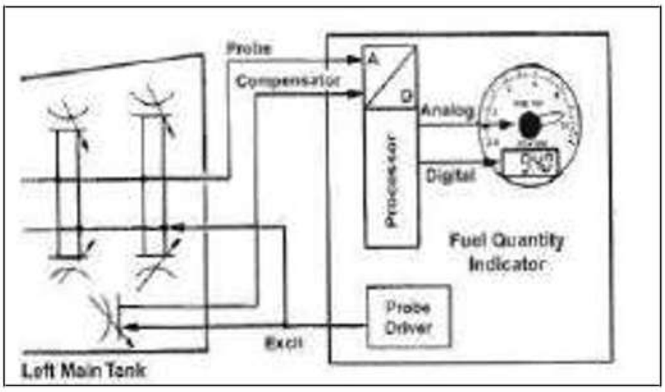

Digital Fuel Quantity Indication System

The fuel quantity indication computer provides actual fuel quantity and tempera- ture indication on the ECAM. The actual quantity to the Multi Tank Indicator and Fuel Quantity Preselector located in, or outside of the aircraft used for refueling.

Refuel valves closes if actual fuel weight reaches preselected value. The quantity preselector is used for automatic refueling, from refuel panel. Aircraft attitude signal compensates influences of pitch and roll angles.

A set of capacitance probes in each tank provides fuel level and temperature. Compensator senses dielectric constant of the fuel. Densiometer senses density of the fuel, for fuel weight determination.

Figure 66: Fuel Quantity Indication System

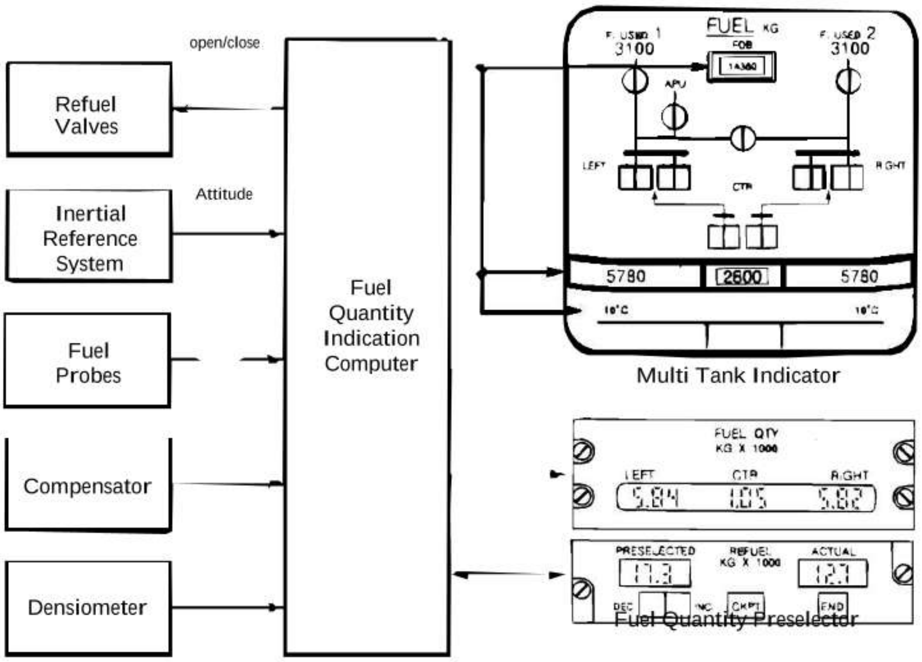

ECAM Fuel Page

Air Data

The flight environment data system comprises the pitot static system. This deter- mines following data of the atmosphere:

- Staticpressure
- Total-or Pitot- Pressure
- Total- or Ram-air temperature

Out of those data instruments or computers derives:

- Altitude
- VerticalSpeed
- Velocity
- Temperature

International Standard Atmosphere ISA

Altitude according Air-Pressure

The pressure decreases with increasing altitude. The rate of pressure-change is not linear with the change of the altitude. At sea level the pressure decreases 1hPaevery28feet.Thealtimetersensestheairpressureandshowsthealtitudeaccording ISA.

Temperature versus Altitude

The temperature in the troposphere decreases linear with minus 2°C per 1000ft. According ISA the standard temperature at sea level is 15°C. Higher than 36’000 feet (tropopause)thetemperaturestaysconstantatminus56.5°C(Stratosphere).

Figure 67: International Standard Atmosphere Isa

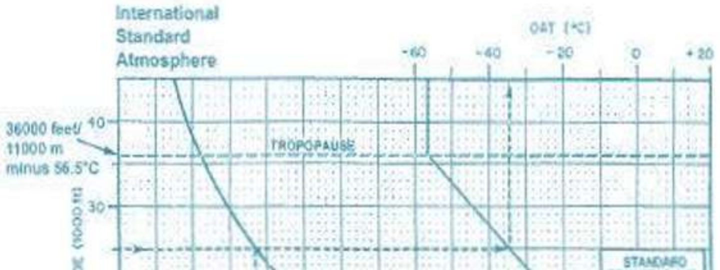

Pitot Static Systems

One of the most important instrument systems is the pitot-static system. This sys- tem serves as the source of the pressures needed for the altimeter, airspeed indi- cator, vertical speed indicator and air data computer.

Light Aircraft

The pitot tube for light aircraft is connected directly to the center opening of the air- speed indicator. The two flush static ports, one on either side of the fuselage, are connected together and supply pressure to the airspeed indicator, altimeter, and vertical speed indicator. An alternate static air valve is connected into this line to supply static air to the instruments if the outside static ports should ever cover over with ice. The alternate air is taken directly from the cockpit of unpressurized air- craft, but pressurized aircraft pick it up from outside of the pressure vessel.

Figure 68:

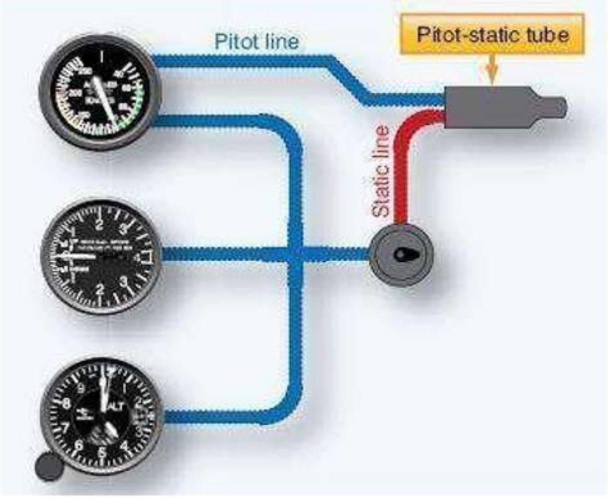

Large Aircraft

Large jet transport aircraft have a more complex pitot-static system. The pitot tube on the left side of the aircraft supplies the captain’s instruments. Static pressure for all of the instruments is obtained from the captain’s static source. The alternate static source valve allows this to be taken from the alternate static sources.

The right-hand pitot tube supplies pitot air pressure to the first officer’s instruments and Mach/Indicated Airspeed warning system. All the first officer’s static instru- ments connect to the F/O static source, and can also be connected to the alternate static source.

The auxiliary pitot tube picks up ram air for the auto pilot, yaw dampers, overspeed warning system, and flight recorder. The alternate static source supplies air to these instruments plus the two flight directors and the reference for cabin differen- tial pressure.

Figure 69:

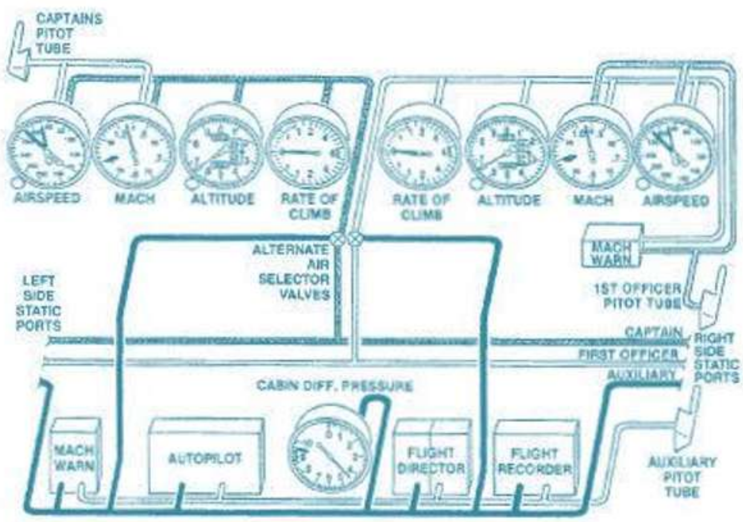

Air Data Sensors

Pitot Tube

A tube with an inside diameter of approximately 6 mm is installed on the outside of an aircraft so, that it points directly into the relative airflow over the aircraft. This tube, called a pitot tube, picks up ram air pressure and directs it into the center hole in an airspeed indicator. An electrical heater in the head prevents building up ice.

Figure 70:

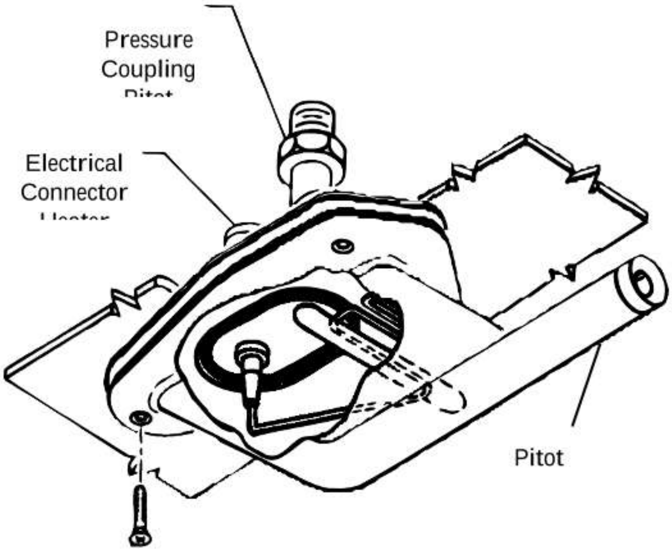

Static Probe

Small holes on either side of the fuselage or vertical fin or small holes in the pitot- static head sense the pressure of the still, or static air. This pressure is taken into the case of the altimeter, airspeed indicator, and vertical speed indicator.

Figure 71:

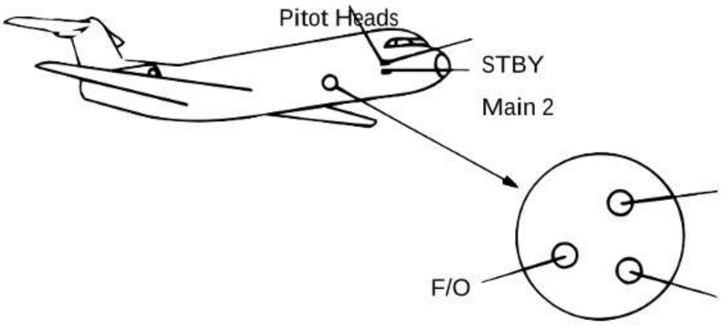

Total pressure or impact air is taken into the front of the head. Static air pressure is taken in through holes or slots in the bottom and sides of the head.

Figure 72:

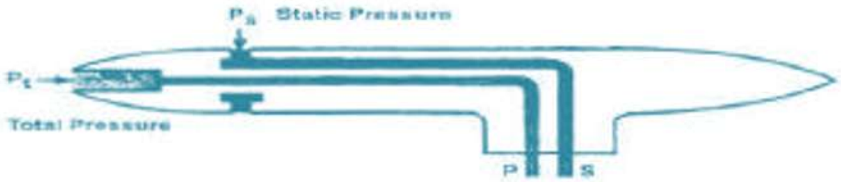

Total Air Temperature Probe TAT/RAT

The outside temperature is sensed with a probe who contains a temperature dependant resistor (Platinium). Its positive temperature coefficient is linear over the existing temperature range. The probe is heated to prevent building up ice.

Figure 73:

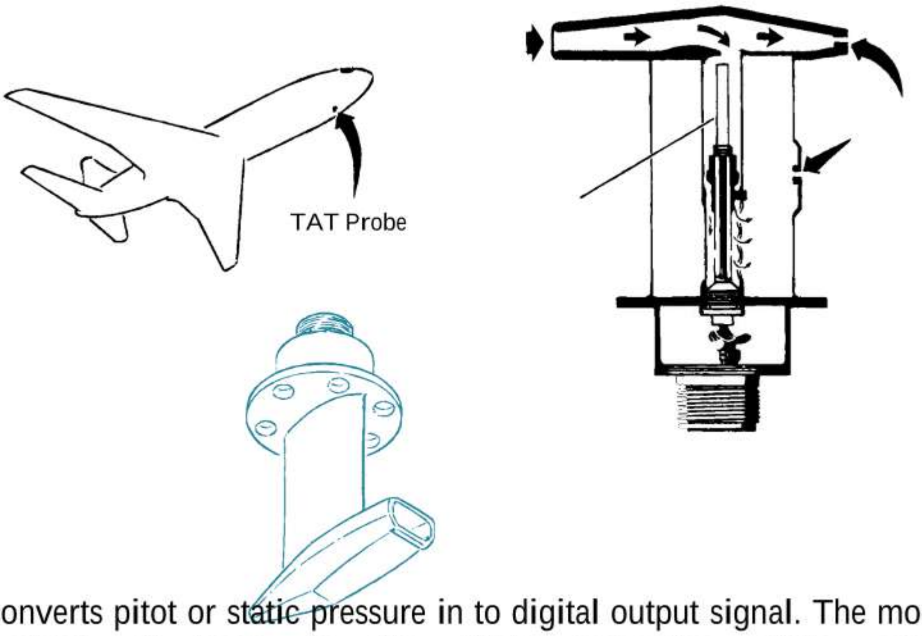

Air Data Module

Airdata modules converts pitot or static pressure in to digital output signal. The modules are connected with a short piece of hose to the pitot- respective static- probe. The output is transmitted in ARINC429 format to the airdata computer.

Figure 74:

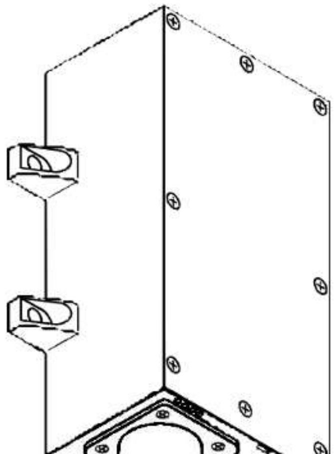

Metered Orifice (very small)
Pitot Probe
Electrical Connector
Quick Disconnect Coupling Pitot - or Static Pressure
ADM

Temperature Probe or StaticPort
Pressure

Discrete Inputs (Pin Program)
PWR Supply from Associated
ADIRU (1.5 VOC)

Altimeters

An altimeter is simply a barometer that measures the absolute pressure of the air. This pressure is caused by the weight of the air above the instrument and, natu- rally, this pressure constantly changes. Also, as the aircraft climbs above the earth's surface, there is less air stacked on top of the aircraft and the absolute pressure decreases. Bymeasuringthischangeofabsolutepressure,theaircraft'saltitudecanbedetermined.

The altimeter is one of the oldest flight instruments, and some of the early balloon flights carried some form of primitive barometer which served to indicate the height. The standard altimeter used in many of the early airplanes has a simple evacuated bellows whose expansion and contraction are measured by an ar- arrangement of gears and levers that transmit the changes in dimensions into move-mentof the pointer around the dial. The dial is calibrated in feet, and since a change in the barometric pressure changes the pointerposition.

It is extremely important that the altitude indication be accurate, and that the pilot be able to quickly read the altitude within a few feet. These requirements are com- plicated by the fact that the pressure lapse rate, the decrease in pressure with al- titude, is not linear: that is, the pressure for each thousand feet is greater in the lower altitudes than it is in the higher levels. The bellows are designed with corrugations that allow the expansion to be linear with a change in altitude.

The barometric scale is calibrated in either inches of mercury, millibars or hekto-
pascal. A knob on the outside of the instrument case, rotates the scale and, through a gear arrangement, the mechanism inside the case. The baro setting is used for the correct altitude measurement. (Altitude, flight-level or height above ground.

Figure 75:

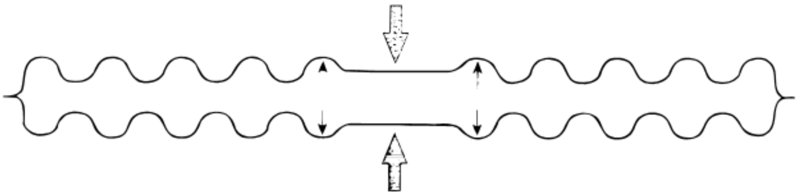

Figure 76:

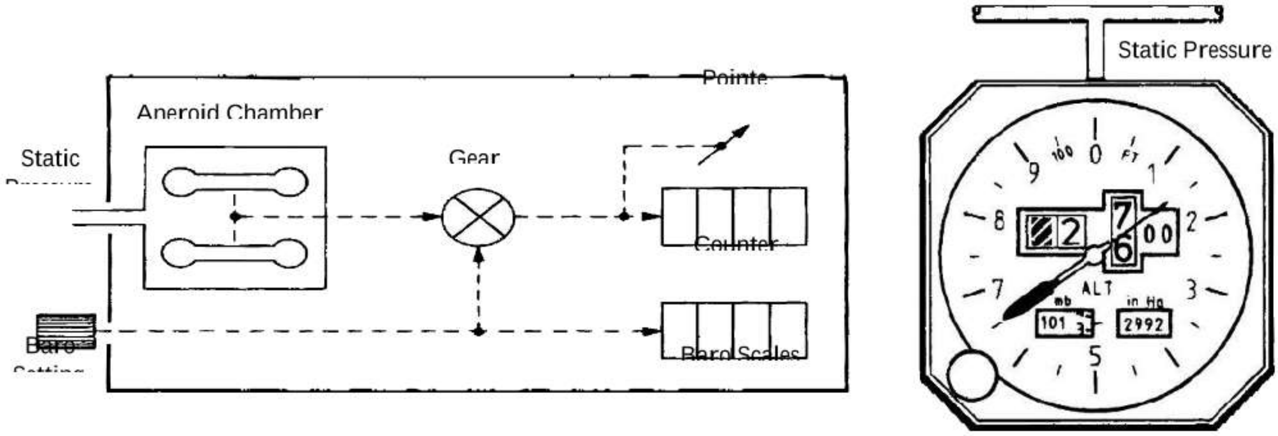

An altimeter can measureheightabove almost any convenient reference point, and for most flying, it measures the alti- tudeabove the existing sea level pres- sure level. This is called indicated altitude and is read directly from the indi- cator when the altimeter QNH setting is placed in the barometricwindow.

Airport control to wersgive the pilot the al- timeter setting which is their local baro- metric pressure corrected to sea level. When the pilot puts this barosetting, the altitude measurement starts at sea level pressure. All elevations onaeronautical

Elevation) setting

For vertical separation between aircraft flying at higher altitudes, pressure altitude or flight level is used. When the barometric pressure scale is adjusted to standard sea level pres-sure,
29.92 inches of mercury or
1013.2 mbar or hPa, the altimeter measures the height above this standard pressure level. This isnotanactualpoint,butisacon-
stantly changing reference. The reason is
that all aircraft in the upper level have their al- timeters set to the same reference.
If an airplane flying at a constant 3000 feet pressure altitude, for example, may vary its
height above the existing sea level pressure, all of the aircraft flying in this same area will vary the same amount and the separation between the aircraft will remain
the same. When an aircraft is flying with the altimeter set to indicate pressure alti-
tude, it is operating at a flight level. Flight level 320 is 32’000 feet, pressure alti- tude.

charts are measured from mean sea level (MSL), and therefore with a bit of simple arithmetic, the pilot can easily and accurately find the aircraft’ s height above any charted position. When the airplane is on the ground with the local altimeter setting in the barometric window, the altimeter should indicate the surveyed elevation of the airplane’s parking space.
Indicated altitude gives us a measure of terrain clearance at low altitudes.

Figure 77:

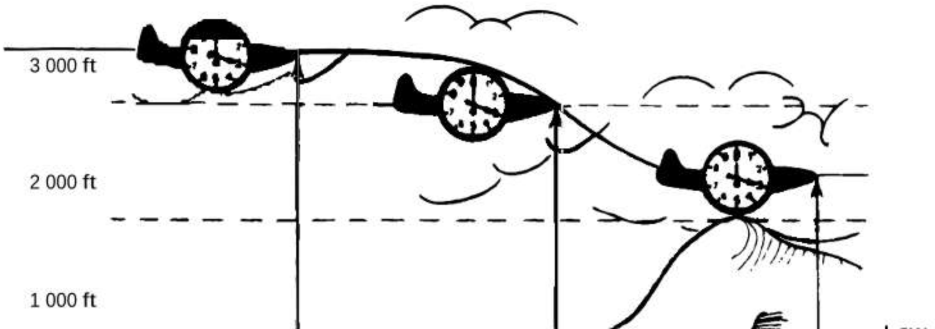

When the baroscale is set, that the alti- meter shows an altitude of zero, with the aircraft on ground, the baroscale shows the local air- pressure of the parking field.

If the pilot gets via radio the local baro pressure (QFE) of the airfield, during ap- proach the altimeter shows the height above ground. Touching the ground, the altimeter shows an altitude of zero.

The flight level is the vertical distance between aircraft and the standard pressure reference. This point can be above sea-level if high pressure exists or below sea- level if a lowpressureexists.ThebarosettingthereforeisQNE.

Elevation

The elevation is the vertical distance from sea level to the airport or obstacle (mountains and hills).

Altimeter Indicators

For many years, altimeters had three pointers, the long one making a complete round each 1,000 feet, a short, fat pointer making a complete round foreach 10,000 feet, and a third pointer geared so that it would have made one trip around the dial for 100,000 feet if the instrument were to go that high. The range of these altimeters is usually 20,000, 35,000, 50,000 or 80,000 feet.

Because of the ease of misreading these altimeters, the more modern instruments combine a drum scale with a single pointer. The drum gives the thousands of feet in digital form, and the pointer indicates the hundreds of feet as it makes one trip around the dial for one thousand feet.

Encoding altimeters are pneumatic altimeters. They have an electronic device in them that sends a digital code to the radar beacon transponder. When the trans- ponder replies to the interrogation of the air traffic control radar on the ground, a numerical read-out appearsonthescreenbesidethereturnfor theaircraft.

Position error is inherent with static systems, and is caused by the static port not always being in undisturbed air. This error varies with each aircraft design and it changes with airspeed and altitude. The servo altimeter has a built-in compensa- tion system that tailors the instrument to the particular aircraft and minimizes this error for the full range of flight speedsand altitudes.

Instrument or mechanical error is produced from the instrument itself and is divid- ed into different aspects:

Scale error. The altimeter must indicate the same altitude shown on the master in- dicator or manometer within a specified allowable tolerance.

Hysteresis. The reading taken with the altitude increasing must agree with the readings at the same pressure level when the altitude is decreasing. A specified tolerance is allowed for thistest.

Aftereffect.Thealtimetermustreturntothesameindication,withintolerance,afterthetest as it had when the testbegan.

Friction. Two altitude readings are to be taken at each pressure level, one before and one after the instrument is vibrated. There should be no more than a specified difference between the two readings.

Case leak. A low pressure is trapped inside the case and it should not leak down more thanaspecifiedamountina givenperiodoftime.

Barometric scale error. The correlation between the barometric scale and the indi- cation of the altimeter pointers must be correct within the allowable tolerance.

Figure 79:

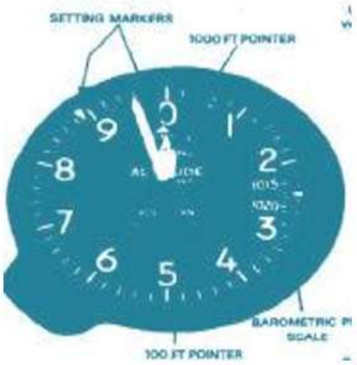

Figure 80:

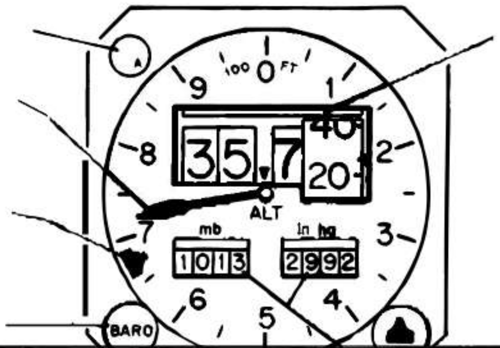

Figure 81

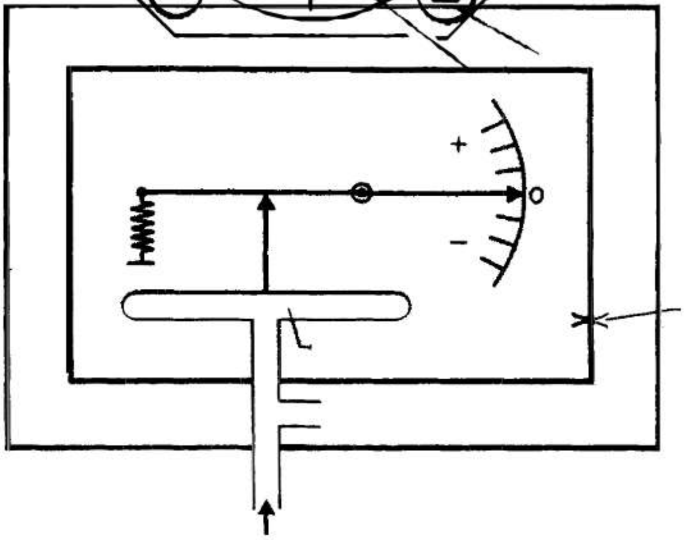

Vertical Speed Indicator

The rate-of-climb indicator, more properly called the vertical speed indicator. Its main function is that of helping the pilot establish a rate of ascent or descent that will allow them to reach a specified altitude at a given time.

The vertical speed indicator has as its operating mechanism a bellows, or pressure capsule, similar to that of an altimeter, except that rather than being evacuated and sealed, it is vented to the inside of the instrument case through a diffuser which is an accurately calibrated leak. The principle of operation of one type of vertical speed indicator. When the aircraft begins to climb, the pressure inside the capsule begins to decrease to a value below that inside the instrument case, and the capsule compresses, causing the levers and gears to move the pointer so it will indicate a climb. The pressure inside the case now begins to decrease by leaking through the diffuser. This leak is calibrated so that there will always be a difference between the pressure inside the capsule and that inside the case that is propor- tional to the rate of change of the outside air pressure. As soon as the aircraft lev-

Figure 82: Instantaneous Vertical Speed Indicator

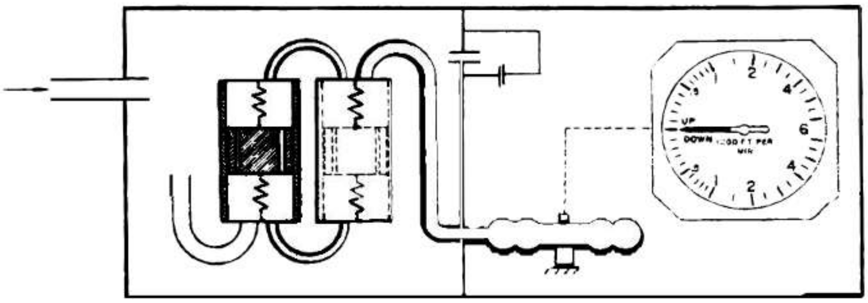

VERTICAL SPEED

Elsoff, the pressureinsidethecaseandthatinsidethecapsulewillequalize,andthe indicatorwillshowa zerorateofchange.

An IVSI uses a mechanism similar to a conventional VSI but it also has an accel- erometer-operatedairpump,acrossthecapsule.Whentheaircraftnosesovertobegina descent,theinertiaof,theaccelerometerpistoncausesittomoveupward, instantaneously increasing the pressure inside the capsule and lowering the pressure inside the case. This change in pressure gives an immediate indication of a descent. At this time, the lag of the ordinary VSI has been overcome and it begins toindicatethedescent,thereisnomoreinertiafromthenose-downrotation,andthe accelerometerpiston willbecenteredsotheinstrumentwillbereadytoindicate the leveling off from the descent.

Figure 83:

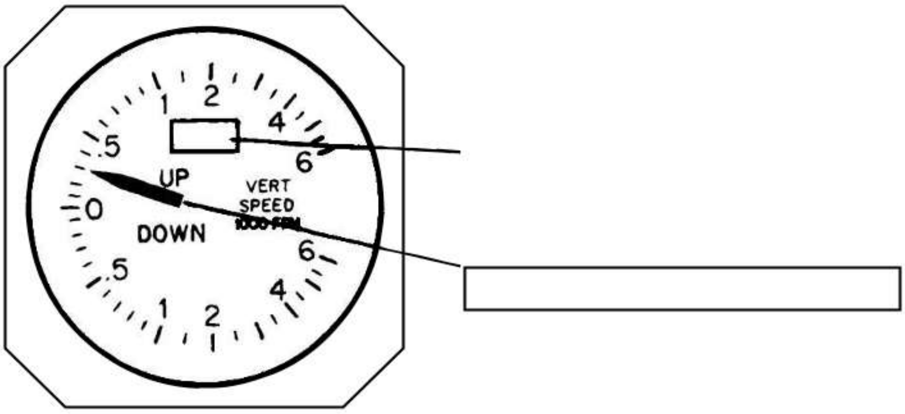

OFF flag
Red flag appears when vertical speed data is unusuable.

Airspeed Indicators
An airspeed indicator is a differential pressure gauge that measures the difference between the pitot and the static pressure. It consists of an airtight case in which a thin metal capsule is mounted. Pitot pressure (Pt) is taken into the capsule and the inside of the case is connected to the static pressure source (Ps). The capsule ex- pands in proportion to the difference between the pitot and the static pressure, and this expansion is measured by a mechanical linkage and is displayed as a pointer moves over the dial which is graduated in miles per hour, knots or kilometers per hour.

Figure 84:

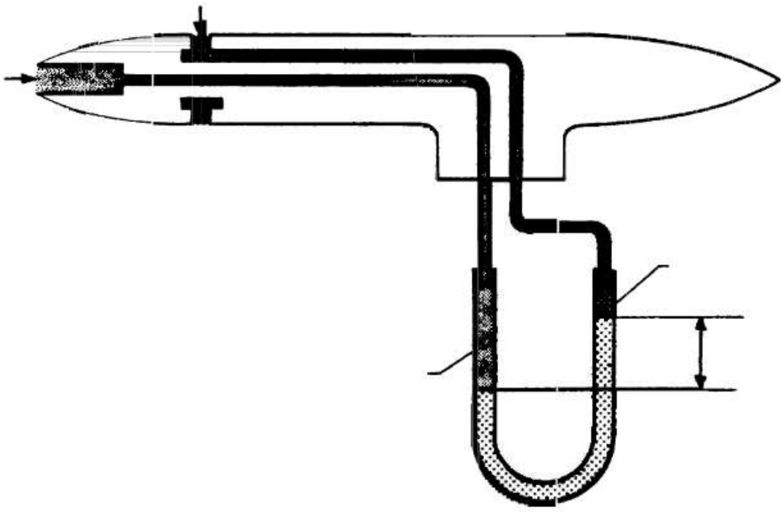

Figure 85:

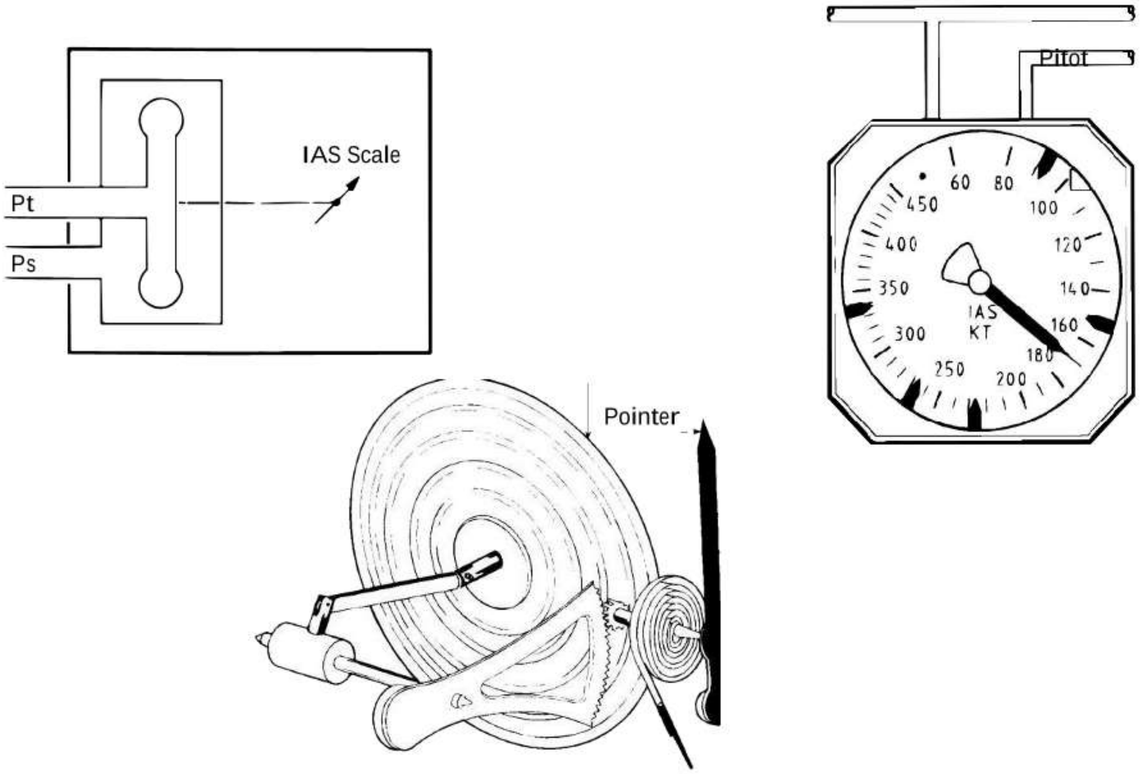

The above pitot tube shows that the Ram Air Pressure is the difference between Total Pressure and Static Pressure. If the airspeed is zero, Pt is equal Ps, so the Ram-Air- Pressure is zero.

Speeds

IAS

The uncorrected reading of an airspeed indicator is called indicated airspeed, and while it relates to the stalling speed of the aircraft, it is of little use to the pilot for navigational purposes.

CAS

For navigation we must convert indicated airspeed into true airspeed, but we usu- ally go through an intermediate step, calibrated airspeed. It is almost impossible to find a location for the static port that is entirely free from airflow distortion, and any distortion produces an error. This error is so small that for practical purposes it is often ignored.

True Airspeed Indicators

There are true airspeed indicators that incorporate not only the airspeed capsule, but a temperature sensor and an altitude bellows that modifies the indication of the airspeed indicator and produces a true airspeed indication.

Electrically driven indicator showing the TAS calculated by the airdata computer. The same instrument will also show outside air temperatures.

Figure 86:

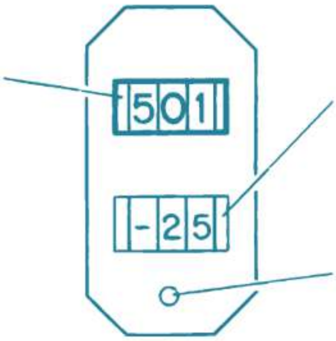

TAS

Calibrated and true airspeed are the same under standard sea level atmospheric conditions, and to find the true airspeed under non-standard conditions we must apply a correction for the temperature and altitude to the calibrated airspeed. This is normally done with a computer, or with one of the hand-held electronic calcula- tors. Light aircrafts airspeedindicatorshavea movabledialthatmayberotatedto

KT SAT

SAT Readout

Alignasetoftemperatureandaltitudescalessothepointerwillindicatethecom-puted trueairspeed.
Nomatterwhattypeofairspeedindicatorisusedontheaircraft,itsaccuracyrelies heavilyonthecorrectoperationofthepitot-staticsystem.

GS

Groundspeed represents the actual speed of the airplane over the ground. It is true airspeed adjusted for wind. A headwind decreases groundspeed, while a tailwind

Temperatures

Total Air Temperature

°C TAT Pushbutton Push to readTAT
TAT in SATReadout

increases it.

1 Knot (Kt) = 1 Nautical mile (NM) per hour
1NM=1arcminutealongtheearthequatorormeridian(Great-Circle)(360 degreesa60minutes=21’600arcminutes≈40’000km)
1 NM = 1.852 km

The TAT is the temperature of the air compressed by the impact of the flying air- craft. Athigherairspeedsthetemperatureisincreased.
This temperature is used for the power setting of the engines.

Static Air Temperature

The SAT is the temperature of the real undisturbed air around the airplane. The Airdata computer reads the TAT from the temperature probe and needs the Mach number to calculate the SAT.

This temperature is used for navigational purposes and to inform the passengers about outside air temperature.

Altitude versus IAS/Mach

The chart illustrates the difference between indicated airspeed, true airspeed, and Mach. True airspeed and indicated airspeed are the same at sea level; however, as altitude increases, holding a constant indicated airspeed results in continually increasing true airspeed. For an example, 400 indicated airspeed at sea level be- comes about 450 true at 10,000 feet, and about 550 true at 20,000 feet.

The Mach numbered lines are drawn on the basis of a standard day air tempera- ture chart;0.9timesthespeedofsoundat sealevelwouldbeabout600knotstrueairspeed,but fromabout36,000feetonup,0.90Machequalsonly525knotstrueairspeed.

If a particular airplane is not supposed to fly faster that 390 knots indicated, and not more than 0.885 Mach, it could fly 390 knots indicated until it got to 21,000 feet. Above that altitude, the indicated airspeed would have to decrease in order not to exceed maximumMach. Flyinganindicatedairspeedashighas390knotsabove
21,000 feet would result in transonic or supersonic speeds.

Figure 87: Mach varies as a result of temperature and altitude.

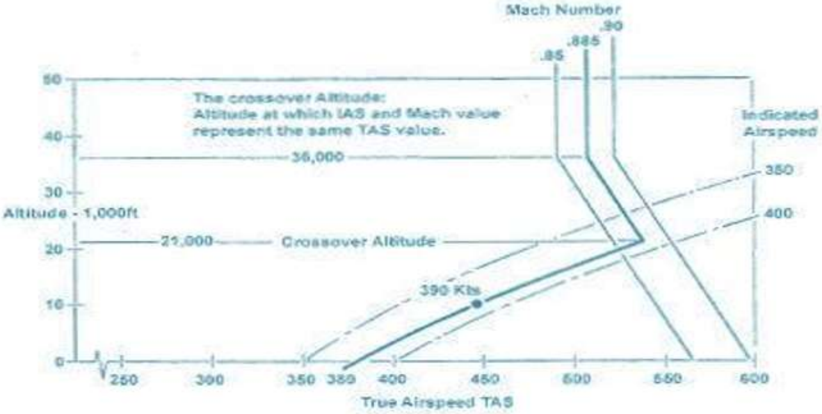

Figure 88: Maximum allowable airspeed indicator

Airplanes that are not designed to fly at sonic airspeed must never be allowed to reach theircriticalMachnumber.Thatis,theymustneverbeflownataspeedthatwillallowthe airflow over any part of the aircraft to reach sonic velocity. When this happens, shock waves form and serious aerodynamic problems can result. Air- planes whose maximum speed is limited by structural considerations have their never-exceed speed marked by a fixed red line on the dial of the airspeed indica- tor. But if the maximum speed is limited by the critical Mach number, the fixed red line isreplacedbyaredpointer(Barberpole)thatisdrivenasafunctionofaltitude.

Overspeed Warning

The maximum operating limit speeds Vmo / Mmo is a airspeed or mach number who should not be exceeded. Warning alerts the pilots, if the limit is exceeded. For example: Below 23’000 ft the airspeed is limited to 372 kts. Above this flight level the speed is limited to Mach 0.88.

The warning can be triggered from an overspeed warning switch, mach airspeed indicator or airdatacomputer.

Figure 89: Overspeed Warning Switch

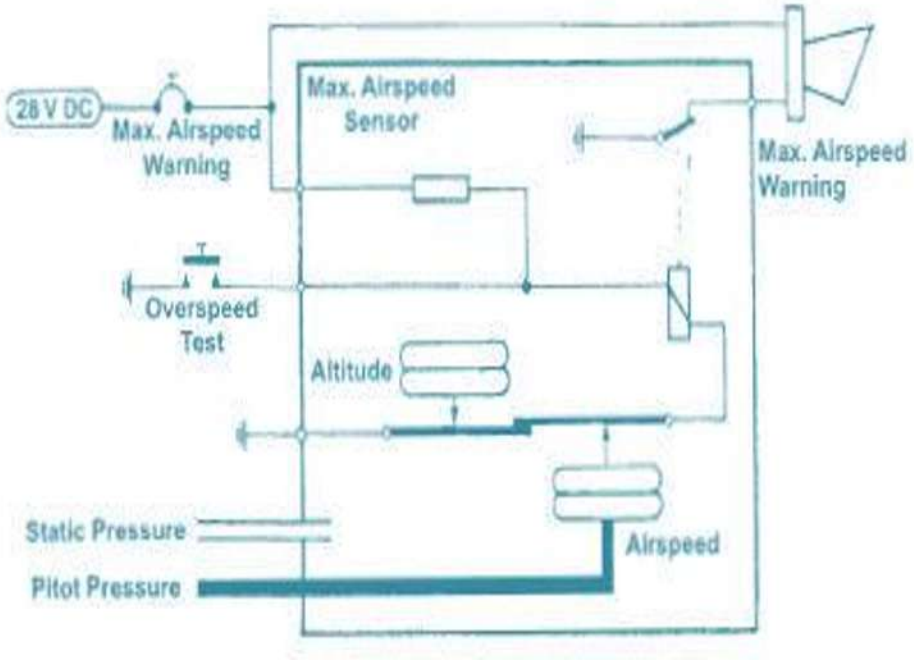

Figure 90: VMO, MMO versus Flight Level

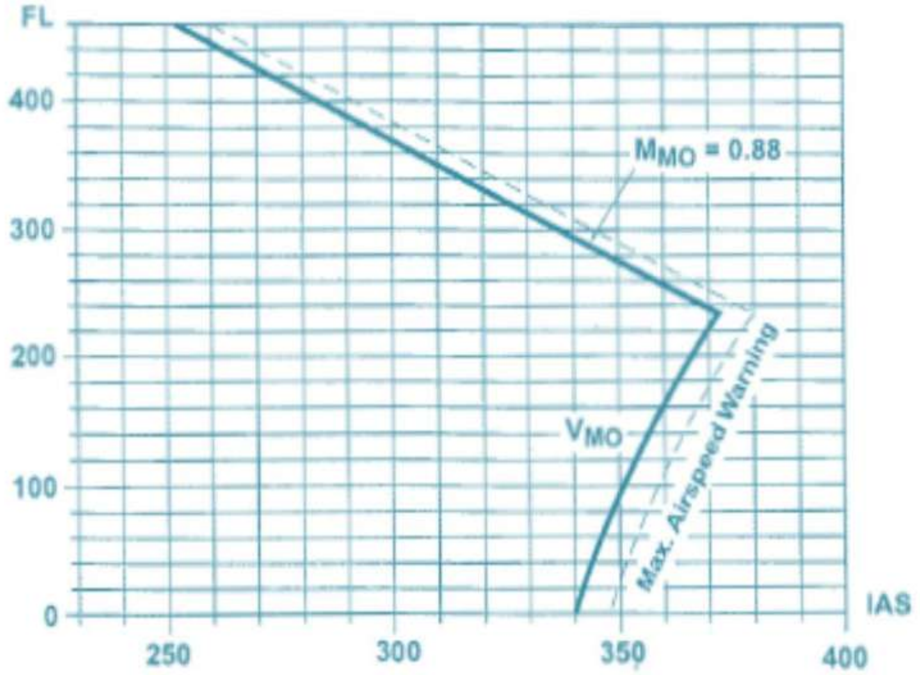

Mach Meter

When airplanes fly at or near the speed of sound, a measurement is needed that compares the speed of the airplane with the speed of sound. This measurement is called the Mach number. An indication of Mach one occurs when the airplane is flying at the speed of sound. Below the speed of sound, the indication is given as a decimal fraction, and above Mach one, the indication is an integer with a decimal. For example, flight at Mach 1.25 is flight at an airspeed of 1.25 times the speed of sound at that altitude. Mach 0.75 is flight at an airspeed of 75% of the speed of sound.

Figure 91:

Combination Airspeed Indicator

The increased value of instrument panel space aboard modem aircraft, and the need to integrate as much of this information as possible has brought out one in- strument that combines the airspeed indicator with the Machmeter and also shows the maximum allowable operating airspeed. This instrument also includes "bugs" that are small indicators around the periphery of the dial that may be manually set to indicate the correct speed for certain flight conditions such as that needed dur- ing takeoff or an approach to landing.

Figure 92:

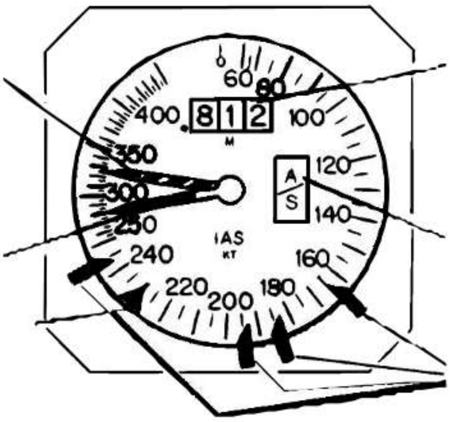

Mach = Aircraft-speed (TAS) / Speed of sound

The speed of sound decreases at decreasing outside temperature (TAT). The Mach number increases if the aircraft climbs with constant TAS.
Vmo Pointer Maximum allowable airspeed

Figure 93: Graph Relationship IAS, TAS, MACH and SAT

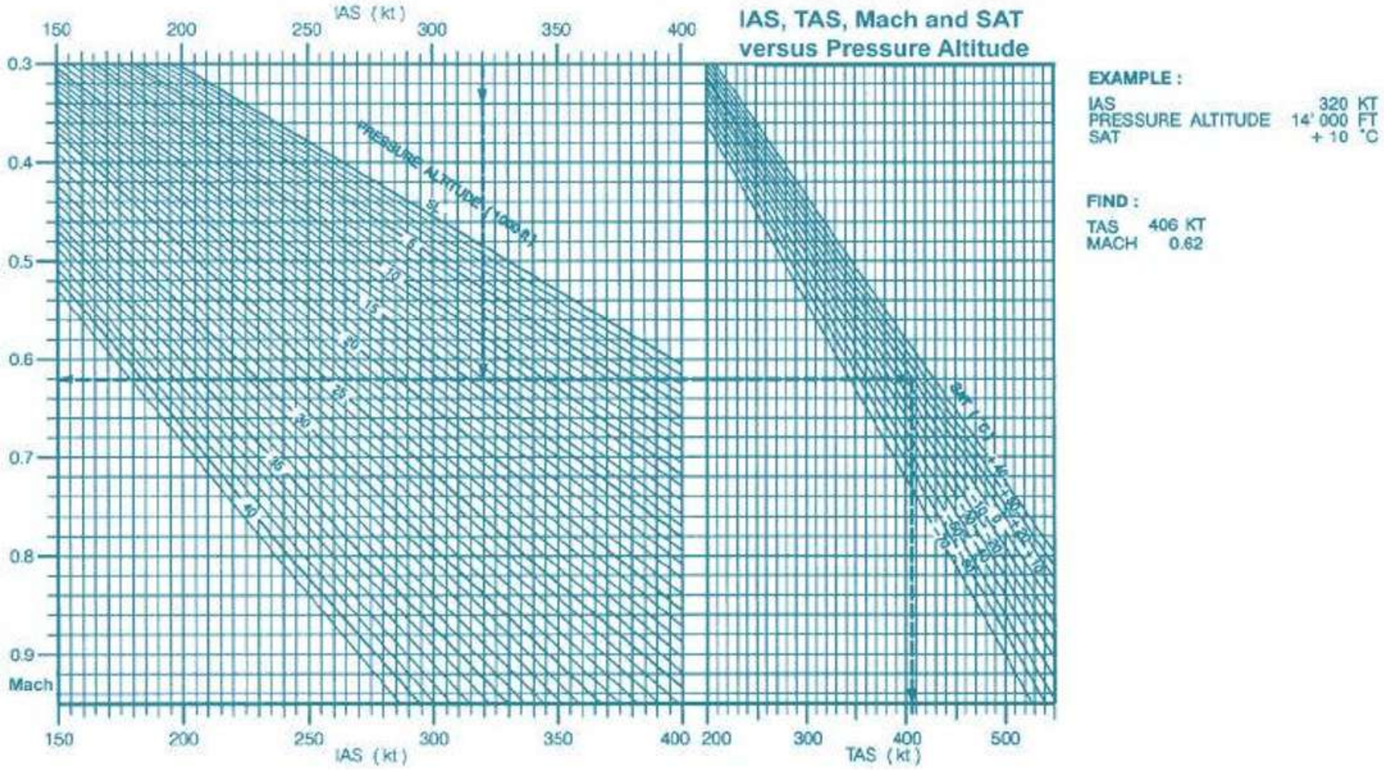

Air Data Computer

Theairdatacomputersamples:discretes,totaltemperature,totalandstaticpres-sures, barosetting,angleofattackandtotaltemperature.Allresultsaresendtotheuserslikeinstruments,displays,Autoflightandnaviga-tion systems.

Figure 94:

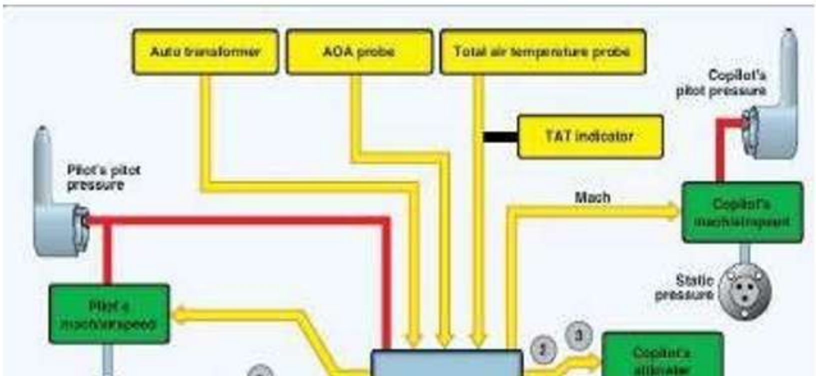

Figure 95: Air Data Computation Model

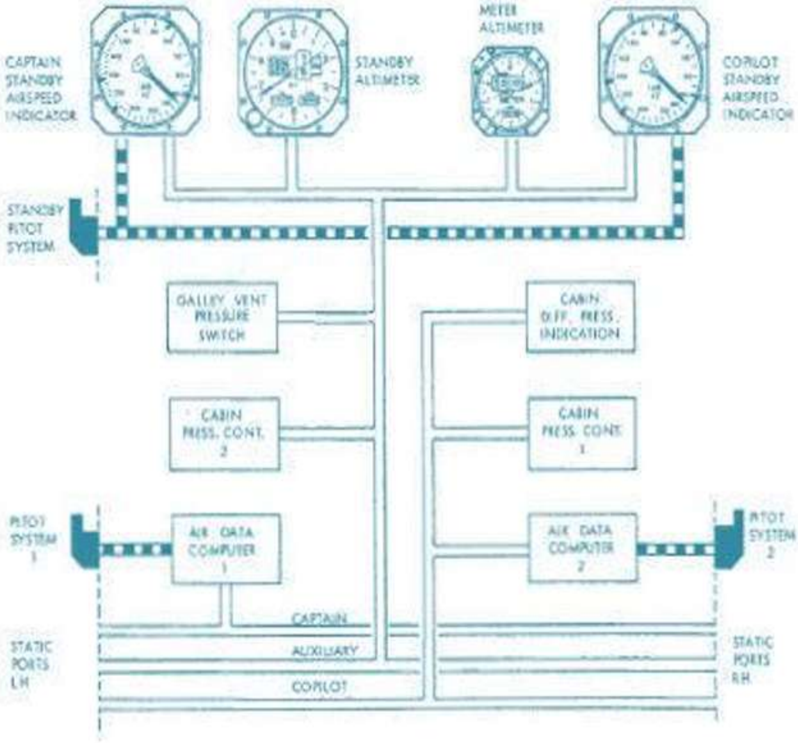

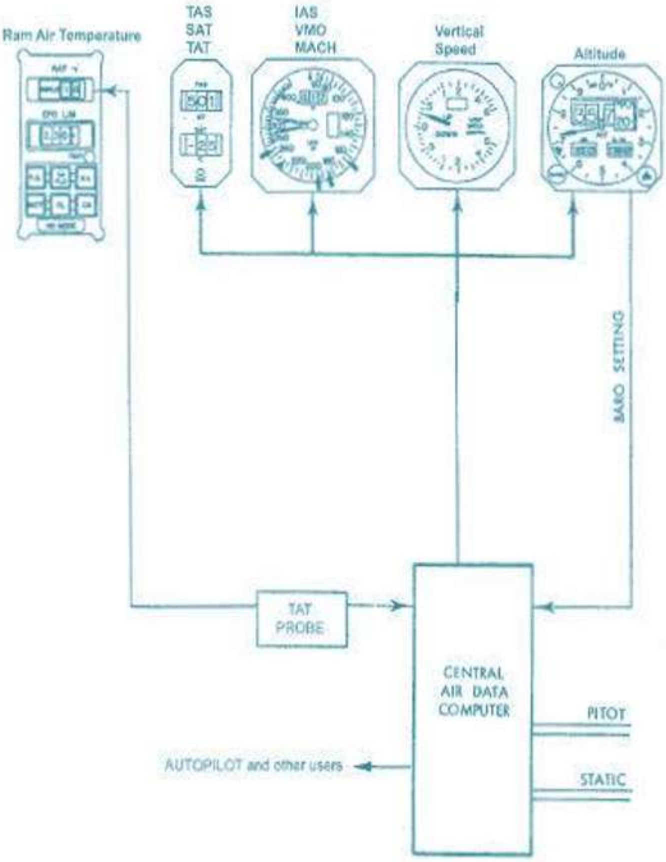

Examples of Airdata Systems
Figure 96: Physical Instruments, Airdata Computer and other Users.

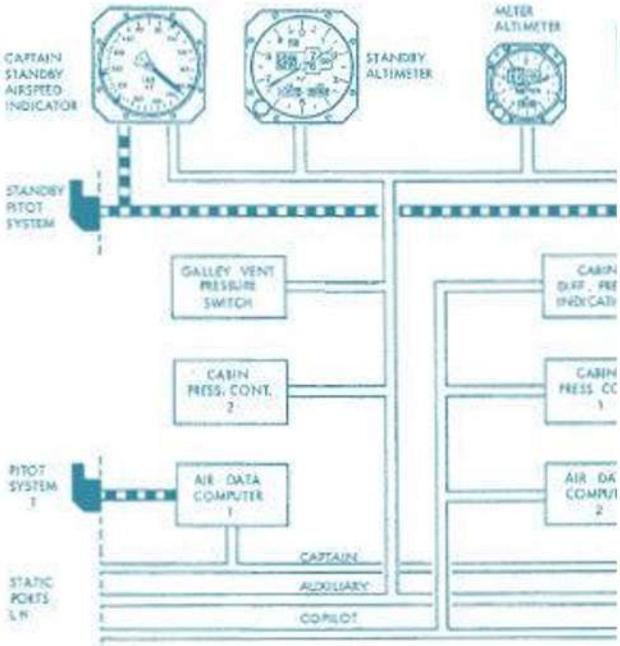

Figure 97: Instruments getting air data from Central Airdata Computer

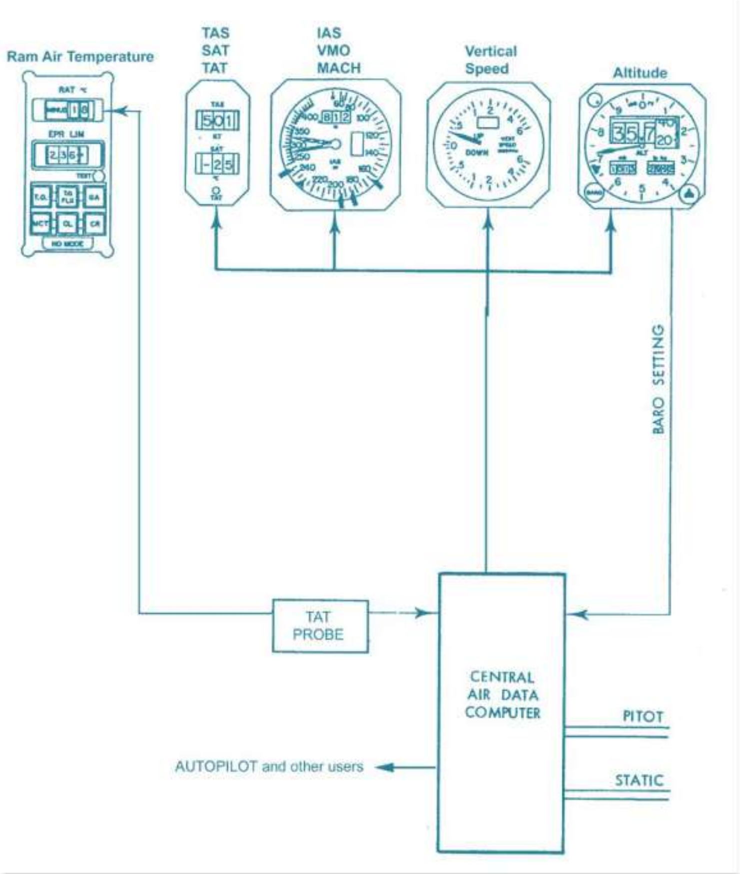

Figure98:CentralAirdataComputerwithEISandotherSystems.

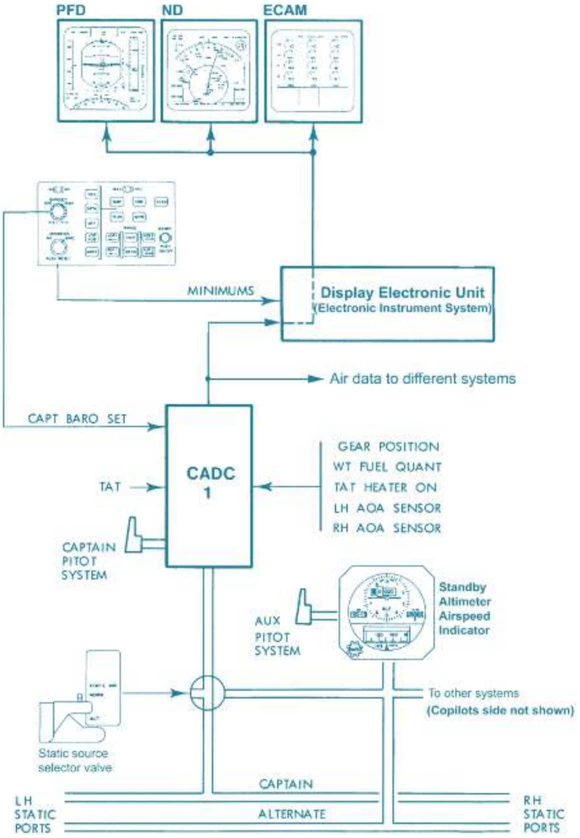

Figure99:Pitot-andStaticPressurefromAirDataModules.

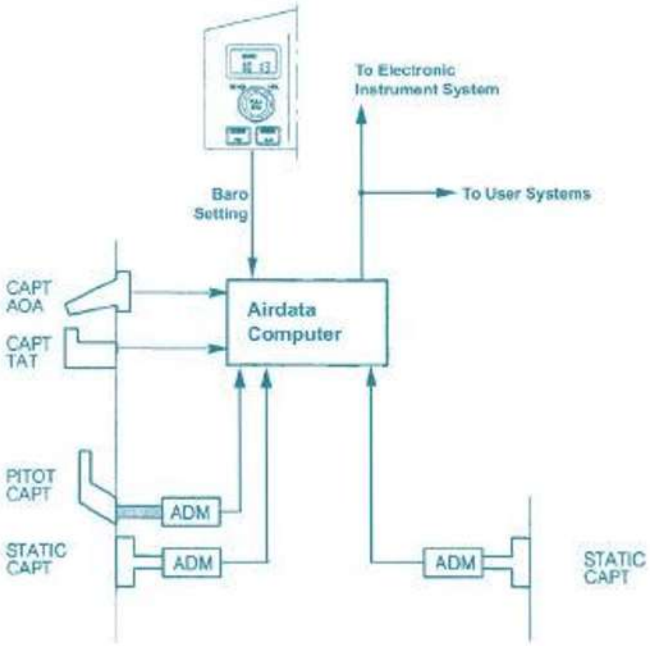

Gyros

GyroS:-Anyspinningbodypossessingthepropertiesofrigidityandprecessionis known as Gyro. E.g.- The Earth, Electronetc

Gyroscope :- It is an accurately balanced fly wheel having freedom in one or more than oneplainotherthanspinningfreedommutuallyatrightangleto eachotherandpossessesthe propertyofrigidityandprecession

Rigidity:- It is the ability of Gyro to resists any external force which tries the change the axis of spin of rotor.
Rigidity=mR2w m= mass of therotor
R= Radius of Gyration W= Angular velocity
Precession: - Angular displacement of the rotor axis that results from the application of an external force.
Precession O=T/mR2w
O = the angle of displacement O= amount of torque
Direction of Precession
Sperry's Rule od Precession:-
Apply a torque on any one of the gimbal rings take it straight to the rim of the rotor in the direction of torque, carry it around 90 in the direction of rotor rotation, an imaginary push at that point, will indicate the direction of precession
Apparent precession:-
Actually the Gyro does not to precess, but it appear to precess due to Earth's rotation, its curvature and position of rotor axis with respect to Earth's axGyro Wander:-
It is the algebraic sum of drift due to apparent precession, unbalancing of gimbal rings and bearing friction..

Gw = Gapr + Gdebal

Figure100:RotatingEarth Midnight

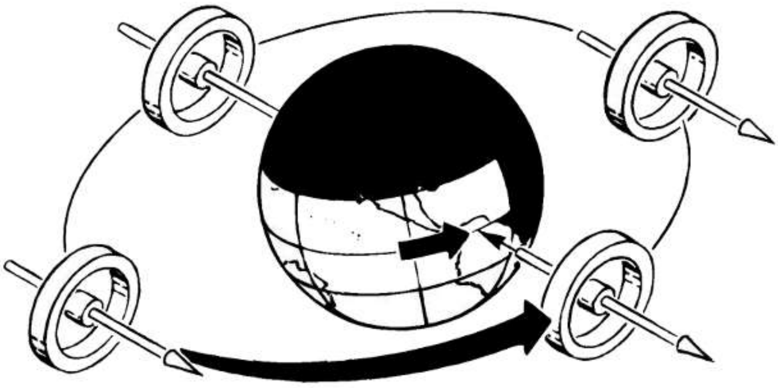

6 A. M.

Figure 101: Earth as a Gyro

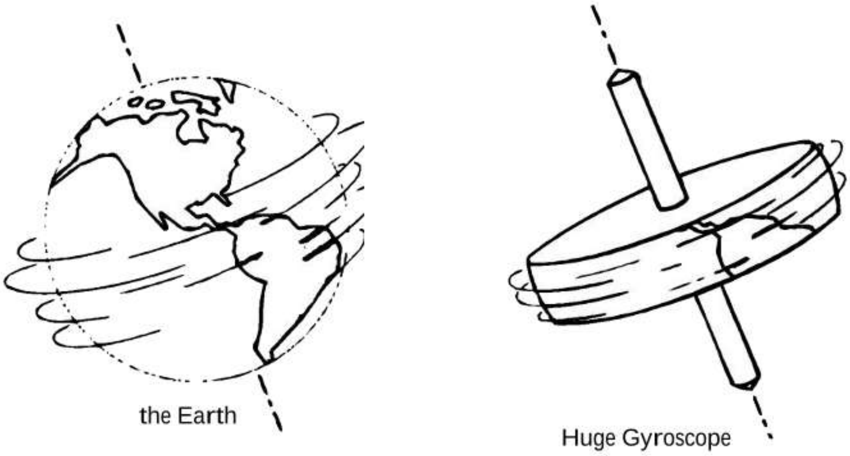

If a force is applied to a spinning gyroscope, its effect will be felt, not at the point of application, but at a point 90 degrees from the point of application in the direction of rotation of the wheel. If a gyro is spinning in the plane and a force is applied to the top of the wheel, it will not topple over as a static body would; it will rather rotate about its vertical axis. This rotation is called the precession of the gyro. If one of the bearings which supports the gyro shaft has friction, it will produce a force that will cause precession.

Precession is not desired in a directional- or vertical gyro, but it may be used in a rate gyro because the amount of precession is related to the amount of force that caused it. We use rate gyros to measure the rate of rotation of the aircraft about one or more of its axes.

Figure 102: Rotating Mass

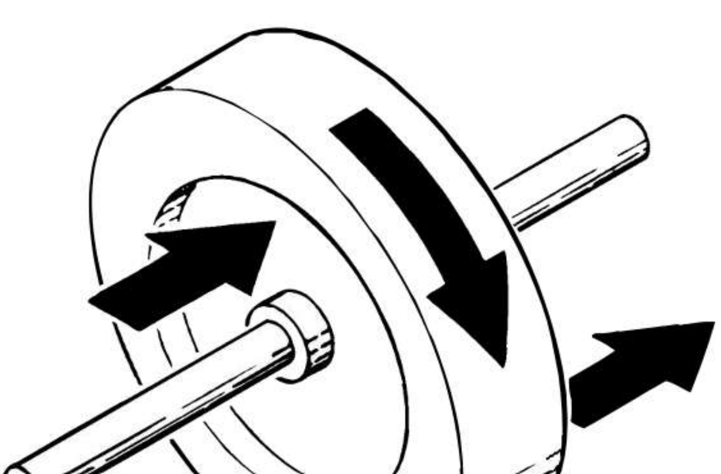

Precession

V 3

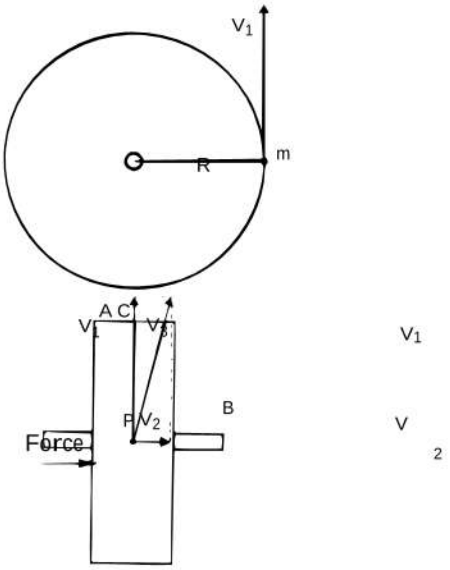

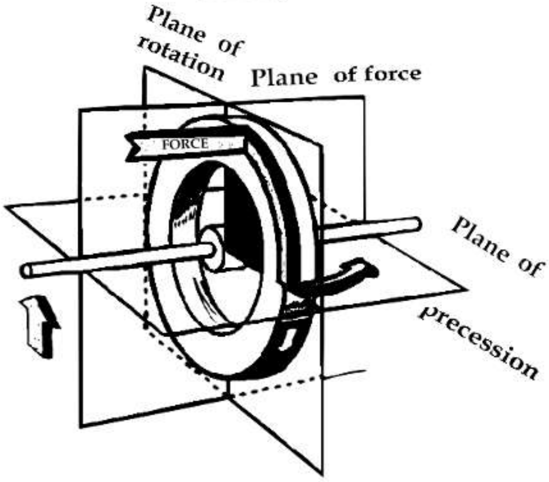

Different Gyros

Space Gyro:- It is mathematically calculated ideal Gyro having rotor, inner ring, outer ring mutually right angle to each other. If it is kept in space, the rotor axis will maintain its position with respect to space.

Free Gyro:- If we try to construct space Gyro the outcome is a free Gyro. Its rotor axis is changing its position continuously. This phenomenon is known as Gyro wander.

Tied Gyro It is same as Free Gyro but its rotor axis is maintained constant with some external force.

Earth's Gyro: It is the same as Tied Gyro but its rotor axis is maintained vertical with the help of Earth's gravitational force.

Rate Gyro : It has only one degree of freedom other than spinning freedom. Rotor is pivoted to gimbal ring in lateral axis. Gimbal ring is pivoted to instrument case in longitudinal axis a restraining calibrated spring is fitted in between Gimbal ring and instrument frame. When A/C turn a torque is applied to the rotor. The Gimbal ring precess against the tension of spring. Rate of precession is directly proportional to the rate of torque applied. It is also known as Rate/RatePrinciple.

Power of Gyro

Suction Driver :- Suction is created to the instrument case of 3.5 +/- 0.5" of Hg and air passage is given upto rotor buckets to rotate the rotor ED. Suction pump and ventury tube areused.

Electrical Gyro: The rotor is electrical driven rotor. Generally induction motor for D.G. and GH having supply of 115V 400 C/S For Rate Gyro 24

D.C. motor R.P.M 4500 + 500

Ring Laser Gyro RLG Sensing the angular rate Inertial Reference System

Figure 104:

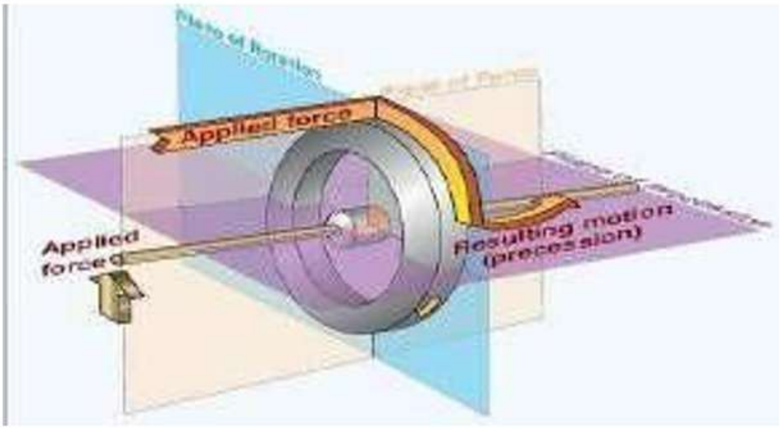

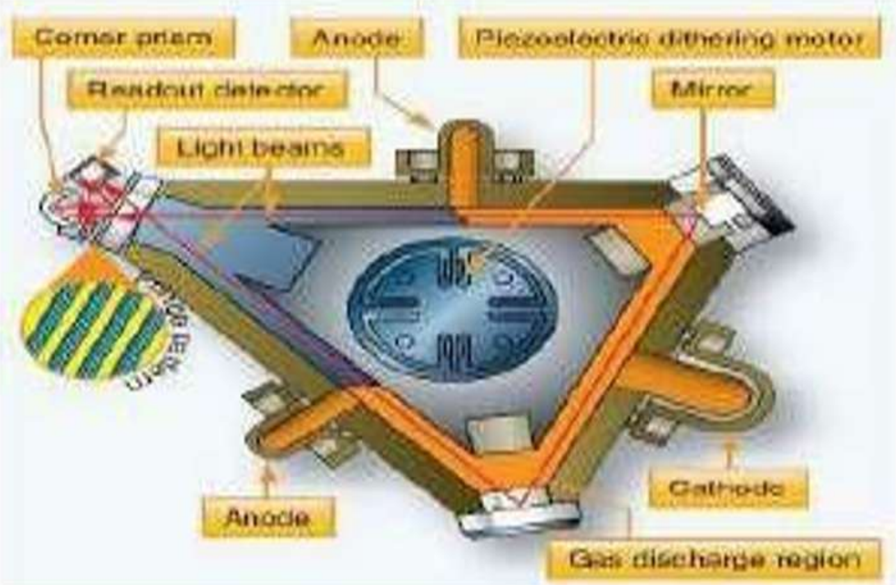

Vertical Gyro

Figure 105:

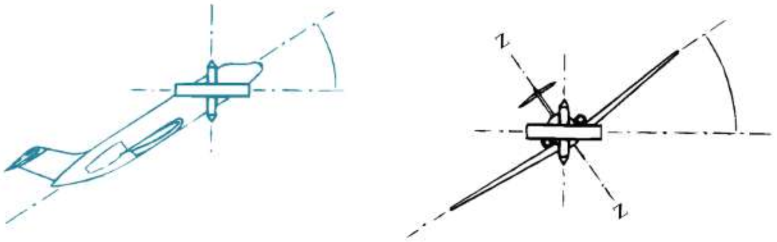

Figure106:

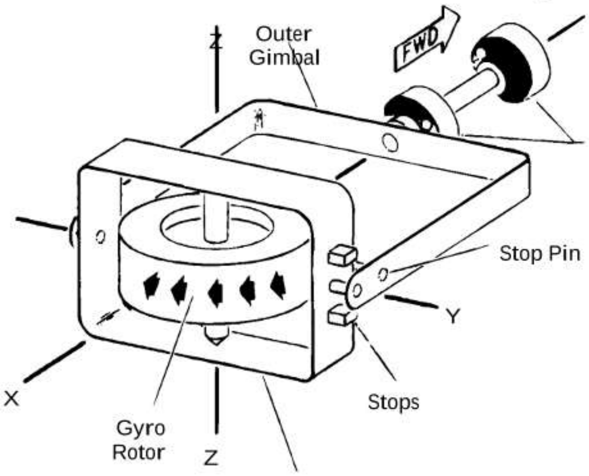

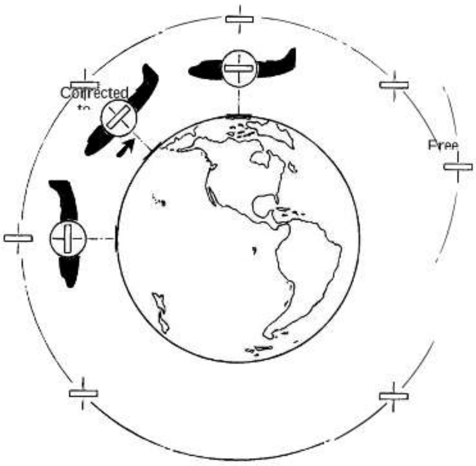

Inner Gimbal (Gyro Housing)

Theverticalgyrosensestherelationshipbetweenthepitchandrollaxesoftheair-craftand a vertical line through the center of the earth, and it gives a stable refer- ence so the actual pitch-andbankangleisknownto keepthewingslevel.

The vertical gyro has two degrees of freedom. The axle of the wheel is always ver- tically directed. Vertical gyros are located inside horizon indicator or build in sepa- rate units as remote vertical gyros. Their Roll and pitch signals are used for artificial horizons, autopilots, flight directors and the weather radar antenna stabi- lisation.

Attitude Indicator

Theexampleshowstheindicationthepilothaswhentheairplaneis:

- flyingstraightanddescending,levelorclimbing.
- bankingtotheleftanddescending,levelorclimbing.
- bankingtotherightanddescending,levelorclimbing.

When the nose of the aircraft is pitched down, the horizon moves up. If the aircraft banks to the right, the sphere moves toward left.The instrument shows the horizon as it would appear if we could actually see it.

Figure 107: .

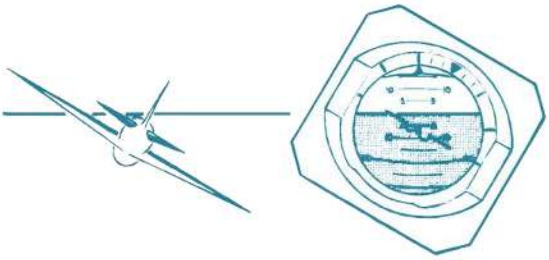

Plane-nosed down Plane-blanked left(nose down) Plane-blanked right (nose down) Horizon
Horizon

Plane-flying level Plane-blanked left(level) Plane-blanked right(level)

Plane-nosed up
Horizon
Plane-blanked left(nose up) Plane-blanked right (noseup)

Above the horizon, the dial is light colored, usually blue, to represent the sky, and below the horizon, it is brown or black representing the ground. Short horizontal lines both aboveandbelowthehorizonhelpthepilottoestablishpitchangles,and

across the top of the instrument, a pointer may be aligned with index marks to es- tablish the desired bank angle. These marks are located at 10, 20, 30, 60 and 90 degrees.

Erection of Vertical Gyros

The vertical direction to the earth center is sensed in unaccelerated flights with pendulums or weights of two rotating balls. Any unbalance acts with force to the gyro to erectitsspinaxisintothevertical.
Pendulum Positions

By Air

Theearlyartificialhorizonusesarotorwithits spinaxisvertical.Itisspunbyajet of air. The housing which holds the rotor is mounted on two gimbals, allowing the aircraft to freely pitch and roll about the gyro. When the gyro is erect, air leaving the gyro housing exitsequallythroughfourverticalslotsinthebottomofthehous-ing.One-halfofeachof these slots is covered with a pendulum valve, mounted in such a way that any tilt of the rotor willopenonevalveandclosethevalveonthe oppositesideofthehousing.Airnow leaving through the slot in one side and not in the other creates a precessive forcethat
will bring the gyro back to its upright, orerectposition. Pendu

Figure 108:

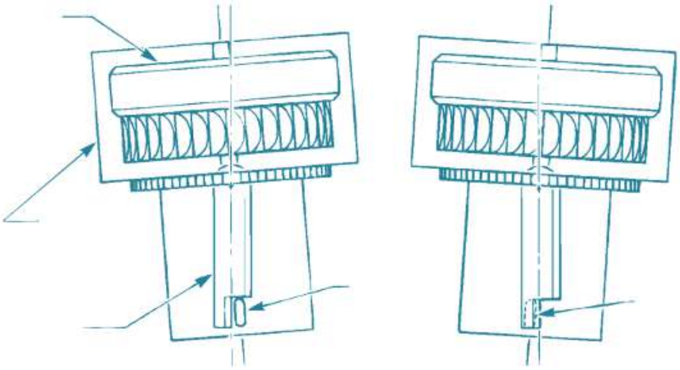

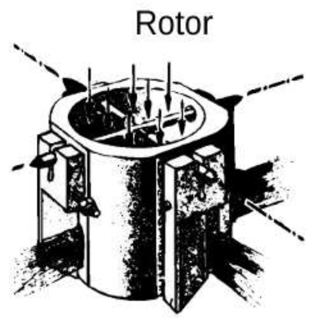

Open
Air Exit Slot Open

Air coming from rotor housing

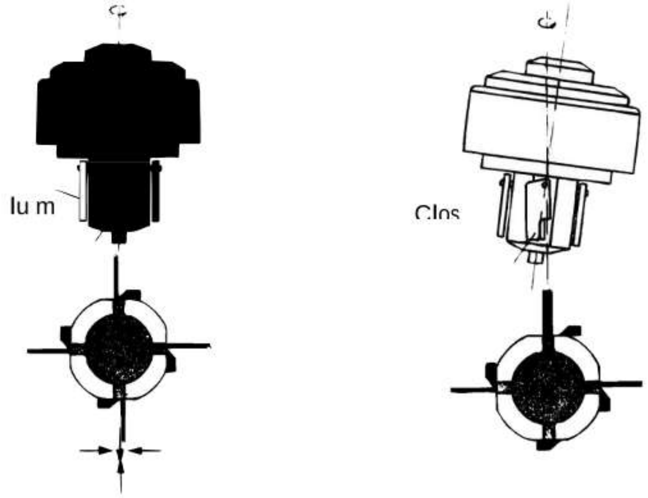

Air Exit
Slot Closed

Figure 109:

Reaction Forces

Erection of electrically driven Gyros

Newer attitude gyros are driven by electric motors. For those gyros there is a

Figure 110: Horizon Indicator (Gyro Errected with Pendulum)

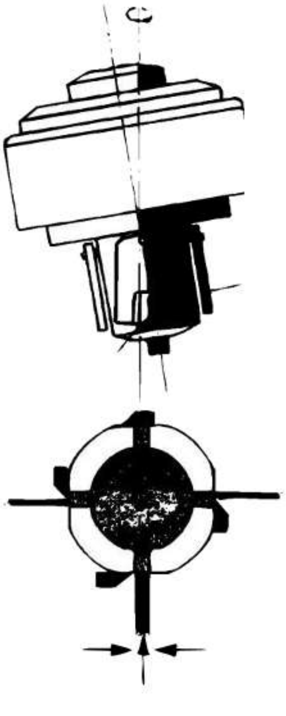

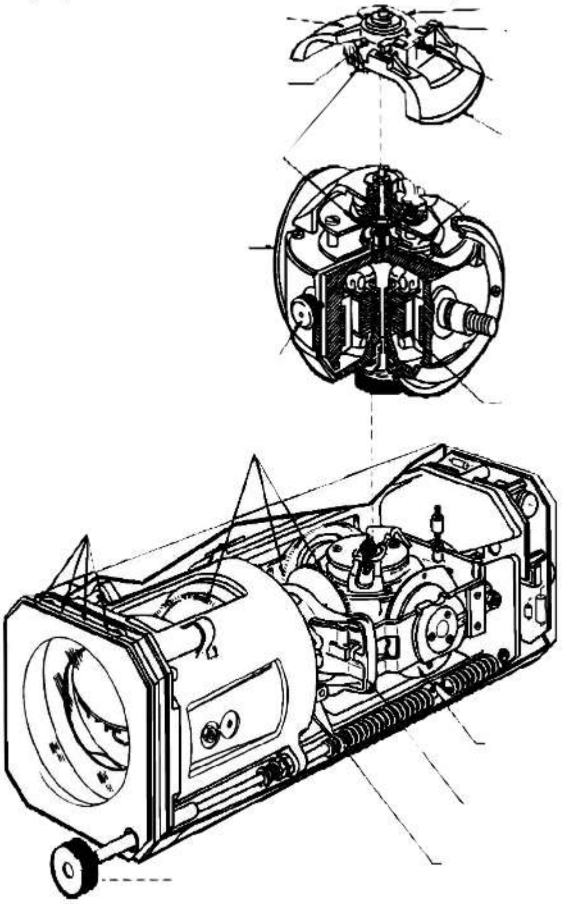

needofUnstable MovingArm

erectionsystemsworkingwithweightssensingtheearthgravity. Pendulum Pivotof
Erectioneffectiscausedwhentheunstablependulumisacceleratedaheadofthedriving
MovingArmPendulum
lug due to a significant horizontal acceleration. This creates a torque caus-ingthe Driving
Counterweight precessioninthecorrectivedirection. Lug Adjustment

If the aircraft accelerates, erection suppression becomes operative, to prevent that the vertical gyro gets in a wrong vertical direction.

Erector Gearwheel

Gyro Erection with Balls
Twosmallsteelballsmovingonacirculartrackaredrivenbyaslowmovingtrans-port
arm.Theeddycurrentdragreducesthespeedfrom18’000rpmto50rpm.
If the gyro spin axis is vertical, the balltrack is situated horizontal. Both balls are situated in opposite position and in balance. No force is presented to the gyro.
If the gyro spin axis is not vertical, assumed point A is downward. Ball 1 has to be raised up,
Ball 2 rolls down toward the stop of the transport arm.
In this case, the force is no more in balance. A force acts to the gyro. The gyro’s precession raises point A upward until both balls are in balance.
Duringcurve-flightstheballsaremechanicallyblocked,topreventthatthegyroistilted in a wrongvertical.

Figure 111: Gyro Errection with slowly rotating Balls

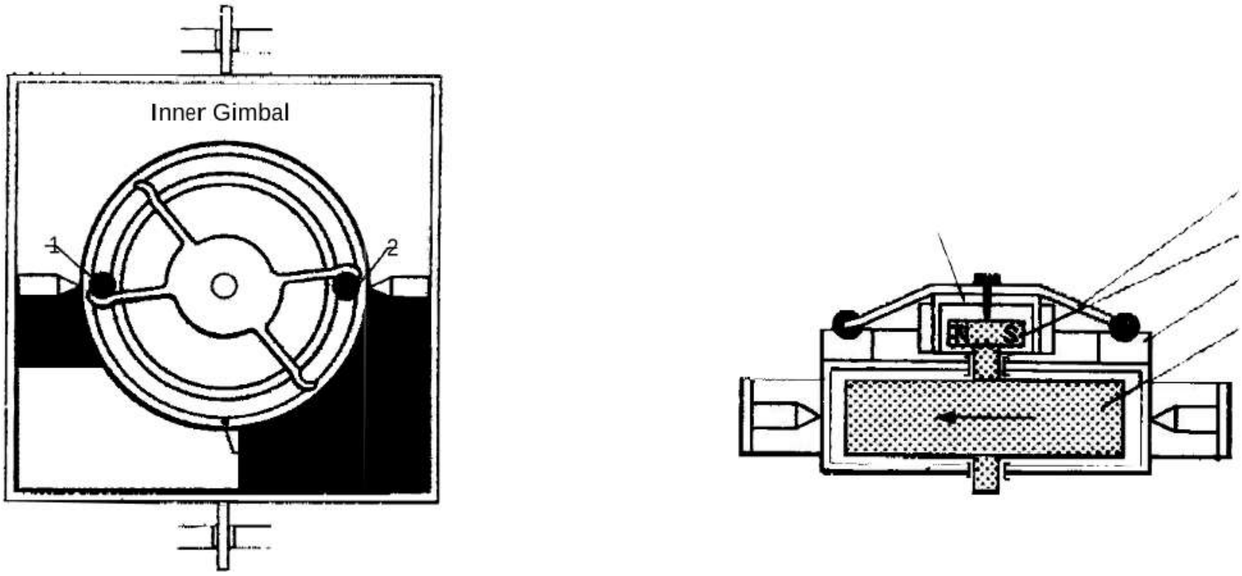

Eddy Current Drag

Transport Arm (50 RPM) Magnet (Rotating)
Ball Track
VG (18'000 RPM)

Remote Artificial Horizon Indicator

In larger airplanes the vertical gyro is a separate unit. The horizon indicator re- ceivesbank and pitch signals via synchrosfrom VG. Amplifiers for the motors in- side the horizon indicator are located in a separate unit or also located inside the Attitude DirectionIndicator.

Theverticalgyroalsoservesothersystemslikeautopilotsandtheweatherradarwithroll and pitchsignals.

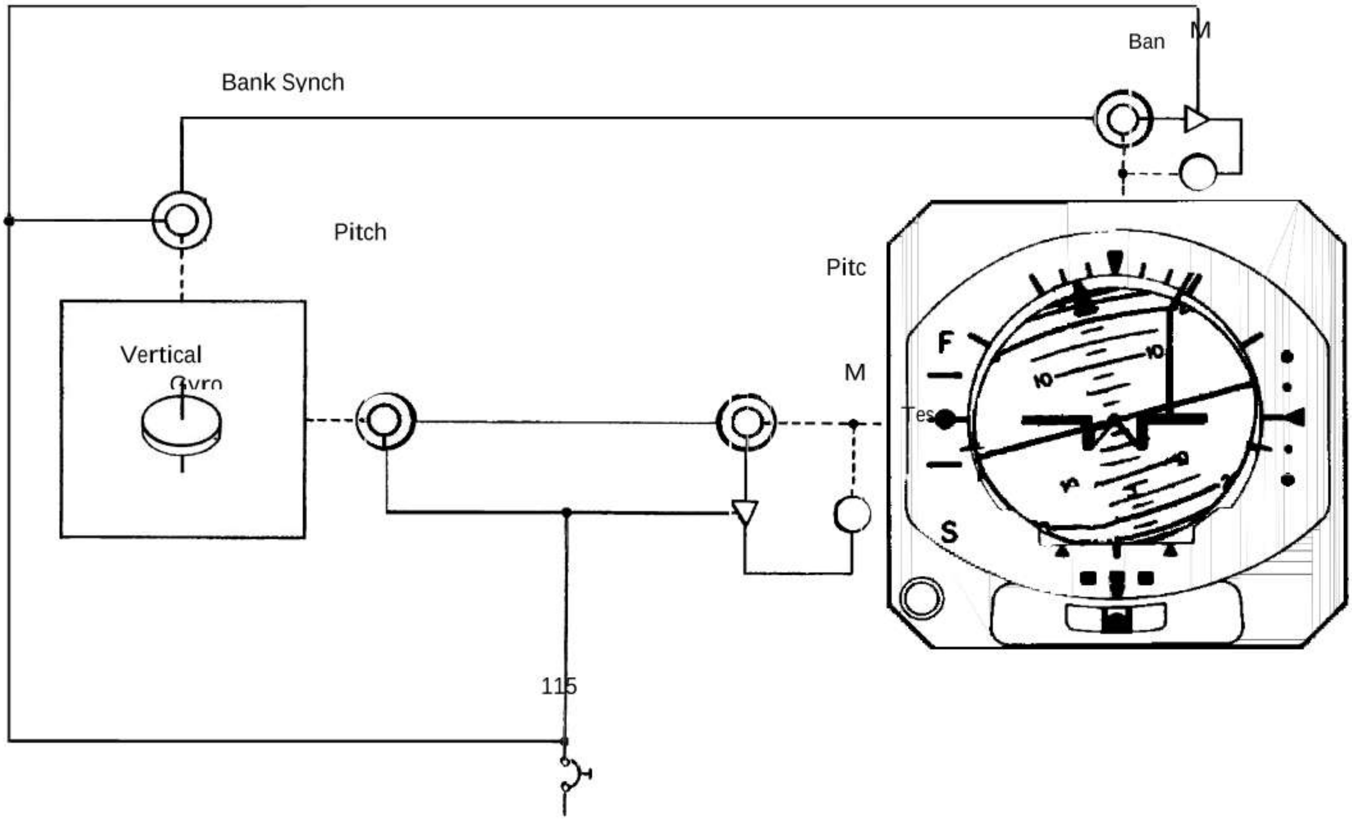

Figure 112:

Electrical Erection of VG

In order to maintain the spin axis vertically, two erection systems must be used, one in the roll axis and one in the pitch axis. The reaction of a gyro to an applied force makes it necessary to use erection forces at right angles to the desired di- rection of motion. This accounts for the pitch erection torquer mounted in the roll axis and the roll erection torquermountedinthepitchaxis.

A torquer is a frustrated motor. It never gets to turn anything, not even itself; but when called upon to do so, will try. A gravity sensing liquid switch, constructed on the principle of a carpenter’s level, provides power to the torquer when the switch is not level. The torquer then provides the force to erect the spin axis vertically in one axis.

Roll erection torquing is cut off when the bank angle exceeds about 6 degrees and pitch erection is cut off if the acceleration is more than 2 kts/sec in square, to eliminate the tendency to erect to false sense of vertical.
The erection control applies for the first 3 minutes of gyro operation a higher voltage to the torquer for fast erection at start up of the gyro.
Bank and pitch synchros transmitting the angle between the gimbals to their users.

Figure 113: Liquid Level Sensor and Torque Motor

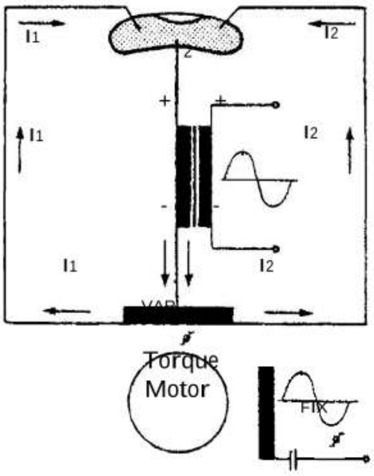

Figure114:VerticalGyrowithelectricalErection

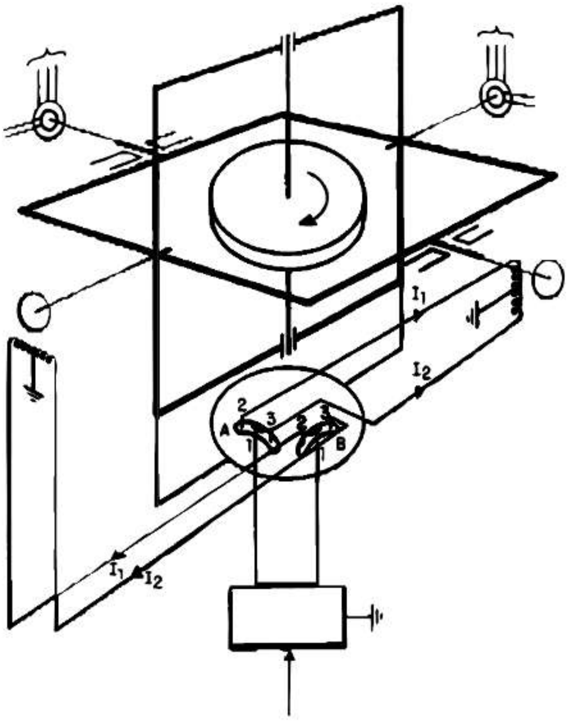

Directional Gyro
The most commonly used magnetic compass consists of a small permanent magnet soldered to a metal float and suspended in a bowl of liquid. This primitive type of direction indicator is quite adequate for visual flight when it is only occasionally referred to, but since it oscillates back and forth so much, we

cannot use it as a heading indicator when we are flying oninstruments.
If we have a freely spinning gyroscope set to align with the earth's magnetic field, we can visualize our heading and it does not oscillate. The main problem is that this instrument has no north seeking tendency, and so it must be set to agree with the magnetic compass every 15 minutes when it is not swinging back and forth.

Figure 115:

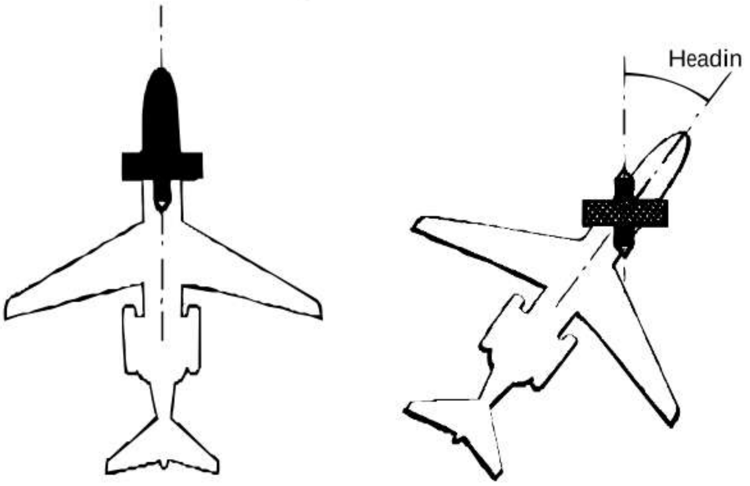

Directional Gyro Indicator

Early directional gyros resembled the magnetic compass with its gyro rotor sus- pended in a double gimbal with its spin axis in a horizontal plane inside the cali- brated scale, The rotor was spun by a jet of air impinging on buckets cut into its periphery. The caging knob in the front of the instrument could be turned to rotate the entire mechanism and bring the desired heading opposite the reference mark, or lubber line. The rotor remains rigid in space, as the aircraft turned about the gyro, the pilot had a reference betweentheheadingoftheaircraftand theearth'smagneticfield.
Figure 116:

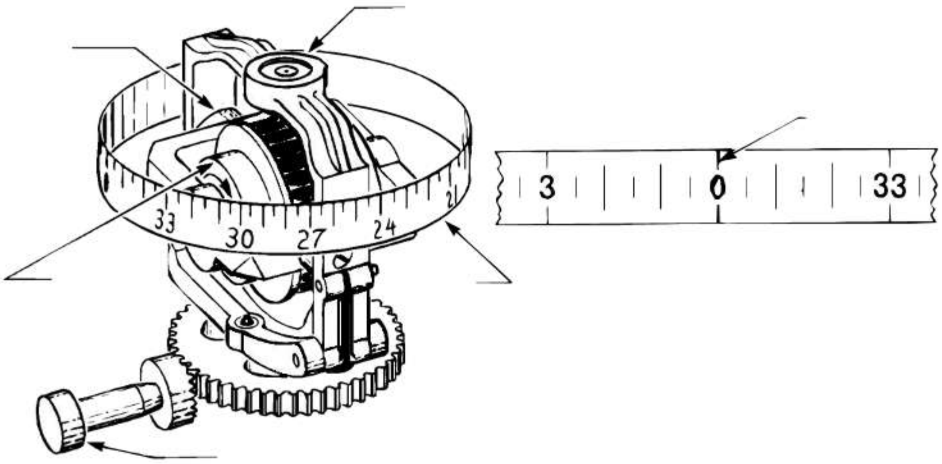

The vertical card compass has instead of a simple lubber line in front of the card, a symbol of an airplane on its face, in front of the dial, with its nose pointing straight up, representing straight ahead. The circular dial is connected to the gyro mecha- nism, so it remains rigid in space and, as the airplane turns about it, the dial ro- tates. The knob in the lower left-hand corner of the instrument may be pushed in and rotated, so the pilot can turn the mechanism to get the dial under the nose of the symbolic airplane that corresponds to the heading shown on the magneticcompass.

Slaving of Directional Gyro

Directional gyro, must be set to agree with the magnetic compass, and it too must be periodically checked to be sure that it has not drifted out of agreement with the compass.

Gyro Heading

Figure117: MagnetCompass MagneticHeading

Figure 118:

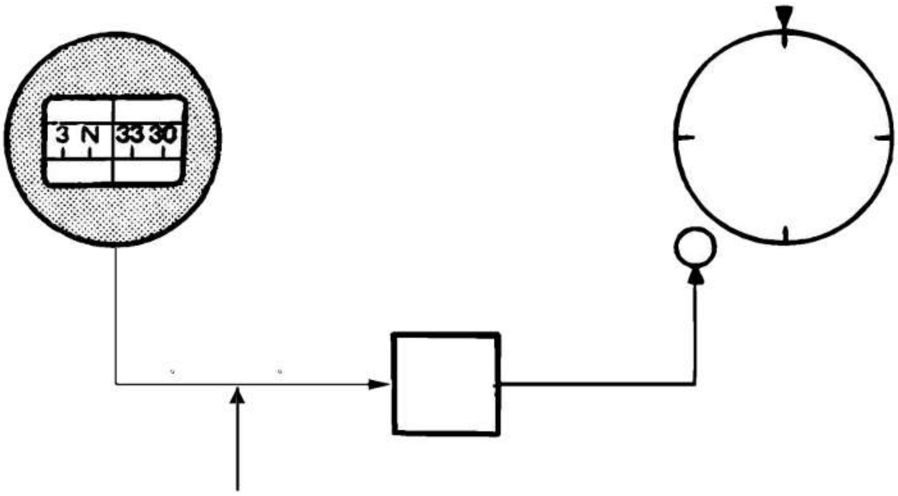

Drift of Gyros

A free running gyro will maintain its direction in space. In relation to the earth, gyros appears to rotate and loosing its direction. This behaviour is called apparent drift caused by the earthrotation.
The earth rotation is 360° in one day this 15°/hour.
Directional Gyro
Earth Rate Apparent Drift = 15°/h x sin Latitude

	Latitude	Earth Rate °/hour
Equator	0°	0

	Latitude	Earth Rate °/hour

Equator	0°	0
Zurich	47°	10.97
Pole	90°	15

Vertical Gyro

	Latitude	Earth Rate °/hour
Equator	0°	15
Zurich	47°	10.23
Pole	90°	0

Earth Rate Apparent Drift = 15°/h x cos Latitude

The apparent drift consists of:

EarthRate	Earthrotation
TransportRate	Aircraftmovesaroundtheearthglobe
RandomDrift	Mechanicalerror

Figure 119: Apparent Drift of Directional Gyro

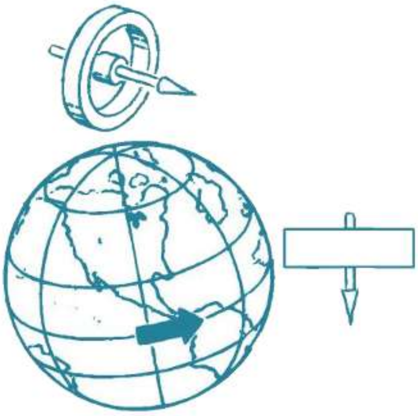

DG AT POLE Drift = 15°/H

DG AT EQUATOR
Drift = 0°/H

Figure 120: Apparent Drift of Vertical Gyro

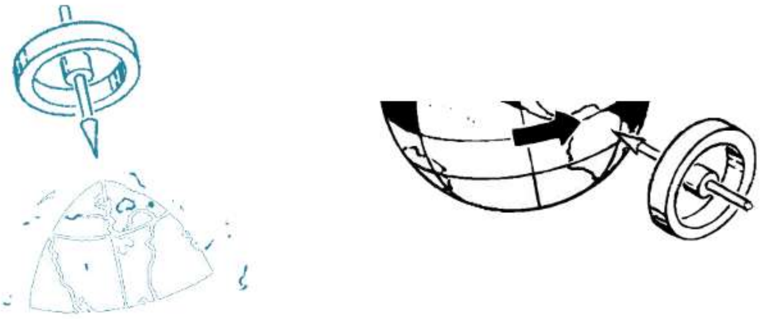

Rate Gyro

Precession is the primary characteristic used for rate gyros. There are two basic rate gyros used for flight instrumentation, the turn and slip indicator and the turn coordinator.Rategyrosarealsoincorporatedintoanumberofautopilotsystems.

The basic difference between a rate gyro and an attitude gyro is in the mountingof the gyro itself, or in the number of degrees of freedom the gyro is given. An attitudegyro is mounted in a double gimbal and has freedom about two axes, while a rate gyro is mountedinasinglegimbalandhasfreedomaboutonlyoneaxis.

Figure121:RateGyro

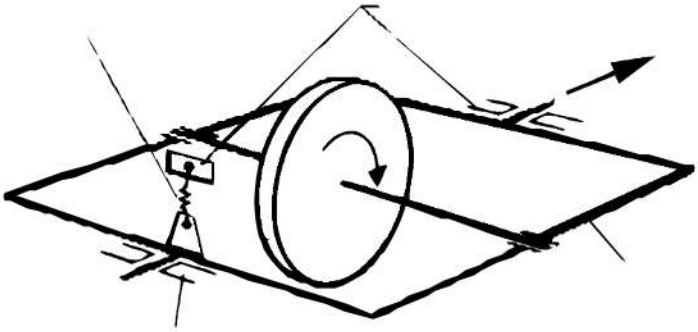

R = Curve Radius
β = Bankangle
Z=ZentrifugalForce N = NormalForce
G = WeightForce
g = Earth gravity = 9.81 m/sec2 v = velocity
$tg\ \beta = v2 / R\ x\ g$

Figure 122: Courve Radius, Ground Speed and Bankangle

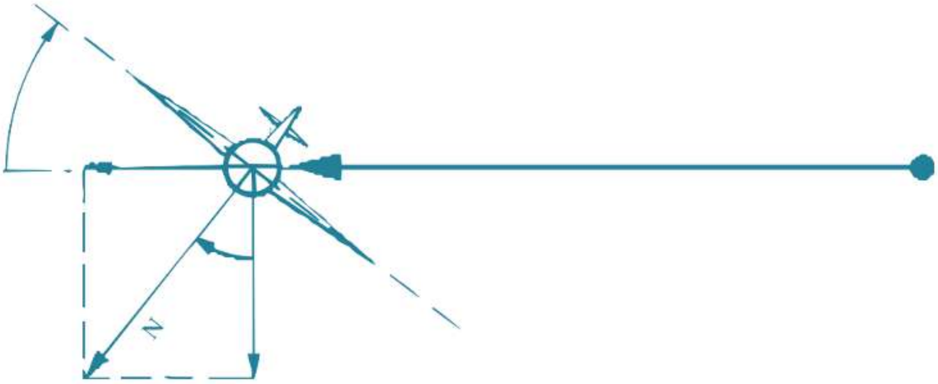

Turn and Slip Indicaton

There are actually two instruments in one housing. The simpler instrument is an inclinometer set into the dial. This is a curved glass tube filled with a damping liquid, and riding in it is a black glass ball. When the aircraft is perfectly level and there are no other forces acting on it, the ball will rest in the bottom center of the tube between two marks. In flight, the ball indicates the relationship between the pull of gravity G and centrifugal force Z caused by a turn. The pull of gravity is affectedby the bank angle: the steeper the bank, the more the ball wants to roll toward the inside of the turn toward the low wing. Centrifugal force, on the other hand, pulls the ball toward the outside of the turn. The greater the rate of turn, the greater the centrifugal force. A coordinated, or balanced, turn is one in which the bank angle is correct for the rate of turn, and the ball remainscentered.

Figure 123: Indication courve correct flown

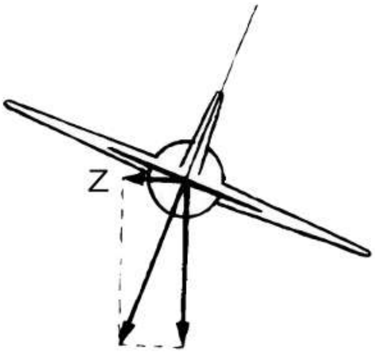

The gyroscopic part of the turn and slip indicator is a rotor, spun either by air or by an electric motor. This rotor has its spin axis parallel to the lateral axis of the air- craft, and the axis of the single gimbal is parallel to the longitudinal axis of the air- craft. A centering spring holds the gimbal level when there is no outside force acting on it. When the rotor is spinning and the aircraft rotates about its vertical, or yaw, axis, a force is carried into the rotor shaft by the gimbal in such a way that one side of the shaft is moved forward while the other side is moved back. Preces- sion causes the rotor to tilt, as the forceisfelt,at90degreestothepointofappli-cationinthedirectionofrotorrotation.

This tilt is opposed by both a dashpot which smooths out the force, and by a cali- brated spring which restricts the amount the gimbal can tilt. A pointer is driven by the gimbal in such a way that it indicates not only the direction of yaw, but the amount of its deflection is proportional to the rate of yaw.

Figure 124: Rate Gyro inside Indicator

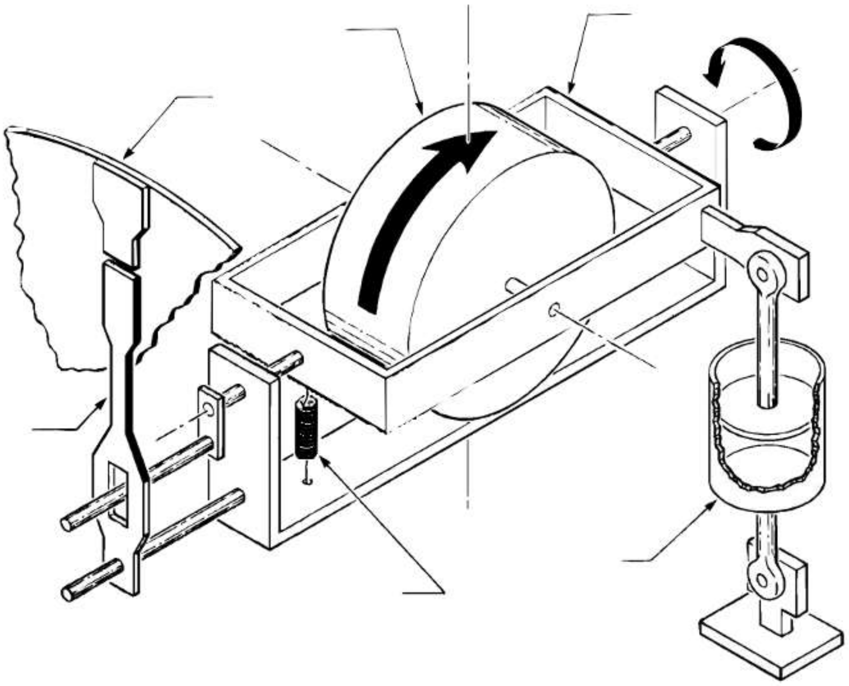

Turn and Slip Indicator

Operation:- Rotor is pivoted to gimbal ring in lateral axis. Gimbal ring is pivoted to instrument case in longitudinal axis. A restraining calibrated spring is fitted in between gimbal ring and the instrument frame. Rate of precession is directly proportional to rate of turn of A/C. It is also known as rate/rate principle. A pointer is attached to Gimbal ring which indicate rate of turn either side rate 1,2,3 and 4 whichindicates180/min,360/min,540/minand720/minrateofturnrespectively.

When A/C turns a torque is applied and gimbal ring precessagainst tension of spring to indicate rate of turn of A/C. No erection device is required because restraining calibrated spring is fitted. But damping device is required to damp out pointer vibration.

Figure 125:

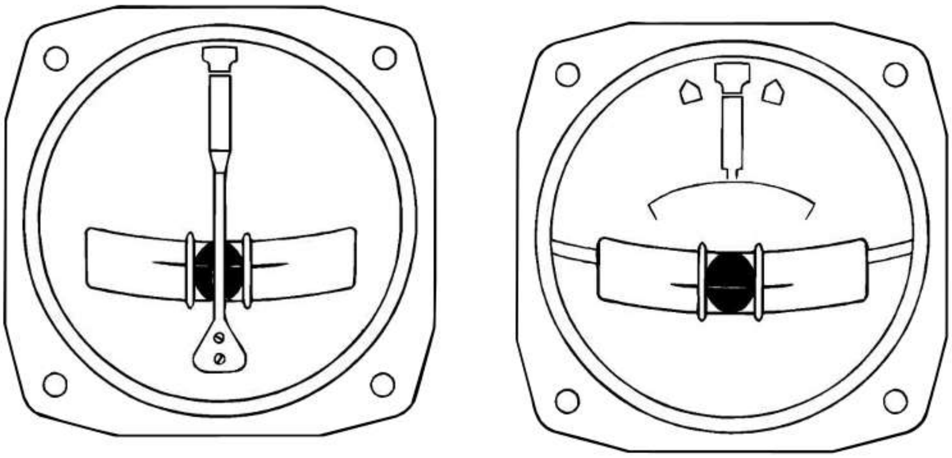

too much bank (slipping) correct bank (coordinated) too little bank (skidding) - 180°/minute left turn - left wing down (slipping)

Figure 126: Example of Turn and Bank Indication

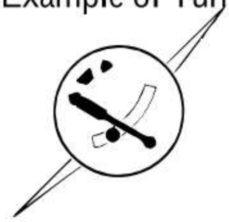

These instruments may also be marked 'FOUR MINUTE TURN." When the aircraft is rotating about its vertical axis at 1,5 degrees per second, the needle of the four- minute turn indicator aligns with the appropriate doghouse.

Turn Coordinator Indicator

A turn and slip indicator can show rotation about only the vertical axis of the aircraft yaw. But since a turn is started by banking the aircraft, that is, by rotating it about its longitudinalaxis,aturnindicatorwouldbeofmorevalueifitsensedthisrotationalso.The mechanism of a turn coordinator is similar to that used in a turn and slip indicator, except that its gimbal axis is tilted, usually about thirty degrees, so the gyro will precess when the aircraft rolls, as well as when it yaws. This is especially handy since a turn and slip indicator is affected by adverse yaw at the beginning of a turn, but a turn coordinator sensesenoughrolltocancelanydeflectioncausedbyadverseyaw.

Rather than using a needle for its indicator, the turn coordinator uses a small sym- bolicairplane with marks on the dial opposite its wing tips. When the aircraft is turned at a standard rate to the left, the wings of the symbolic airplane align with the mark on the leftsideofthe instrumentdial,the onemarked"L".Whenthe rateofyawiscorrectforthe bankangle,theballwillbecenteredbetweenthetwolinesacrosstheinclinometer.

Figure 127:

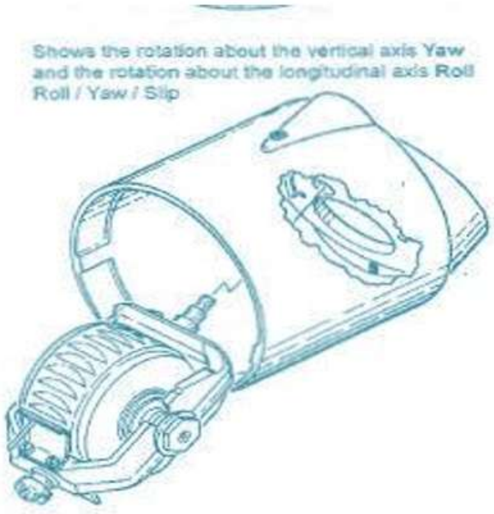

Gyro Instrument Power System

Electric Motors

In today commercial Aircrafts all gyros are driven by electric motors. Their speed is between 6'000 and 20'000 RPM.

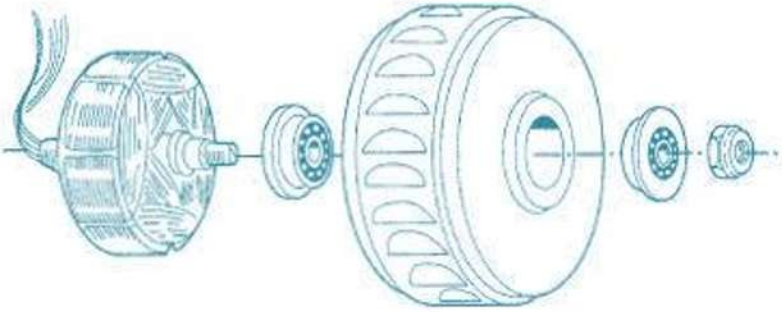

Pneumatic System

For safety, the attitude gyros may be electrically driven and the rate gyro is driven by air, or the attitude instruments may be driven by air and t riven. Some gyroscopic instruments are dual powered.

Gyrowheels in pneumatic instruments a e notches, or buckets in their periphery. Air blows through a special nozzle into gyro at a high speed.

Most there is used a vacuum system w iven vacuum pump. For aircrafts flying higher than 18'000 ft there is a compre enough airmass through the gyro.

Figure 1 Ventury

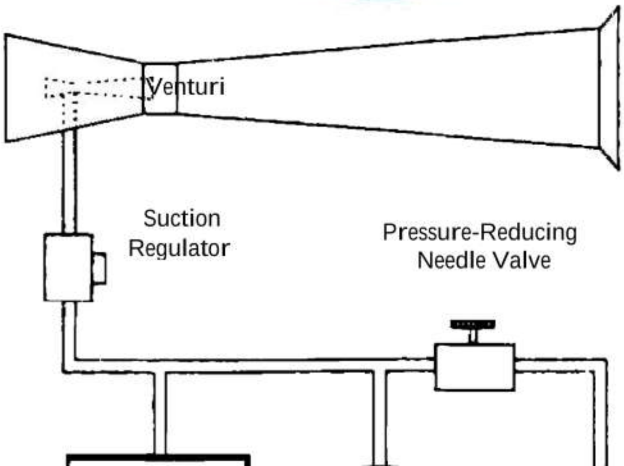

Figure 130: Vacuum System with Pump

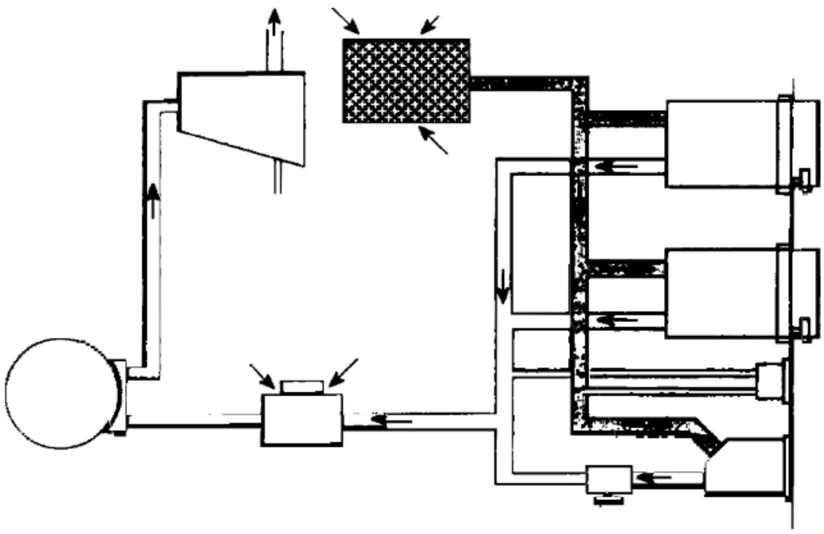

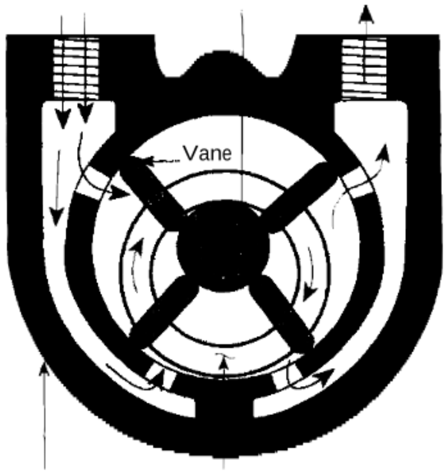

Figure 131: Engine driven Vacuum Pump

Compass

Earth Magnetic Field

Theearthisagreatspherespinninginspace,butitisalsoahugepermanentmag-netwitha magnetic north and a magnetic south pole. A freely suspended perma- nent magnet on the surface of the earth will align itself with the lines of flux linking the two magnetic poles, and it will maintain this alignment anywhere on the surface of the earth. Because of this alignment, navigation should be simple, but there are two problems with this alignment we must understand before we can use a mag- netic compass for navigation. The geographic and the magnetic poles are not lo- cated together. The magnetic poles are locatedsomewherearound74°N101°W

2000 km from the geographic poles and, to further complicate the situation, they move around continually, not enough to cause a big problem, but enough that our aeronautical charts must be periodically updated to give us the correction we need to compensate for this difference in location.

Figure 132:

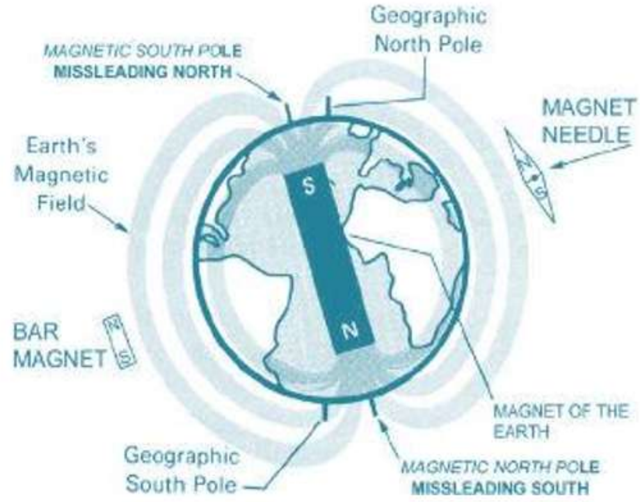

Inclination

When the compass is pulled by the earth' s magnetic field, the compass' s magnet tends to point North and the magnet also tends to pull toward the earth' s surface. Near the poles this tilting force is the greatest, so the compass is no more useable. It diminishes as you approach the equator. To compensate for this tilting force, the compass float is weighted on the side nearest the equator. For aircraft which fly in the northern hemisphere, the weightisonthesouthendofthe float.

Figure 133:

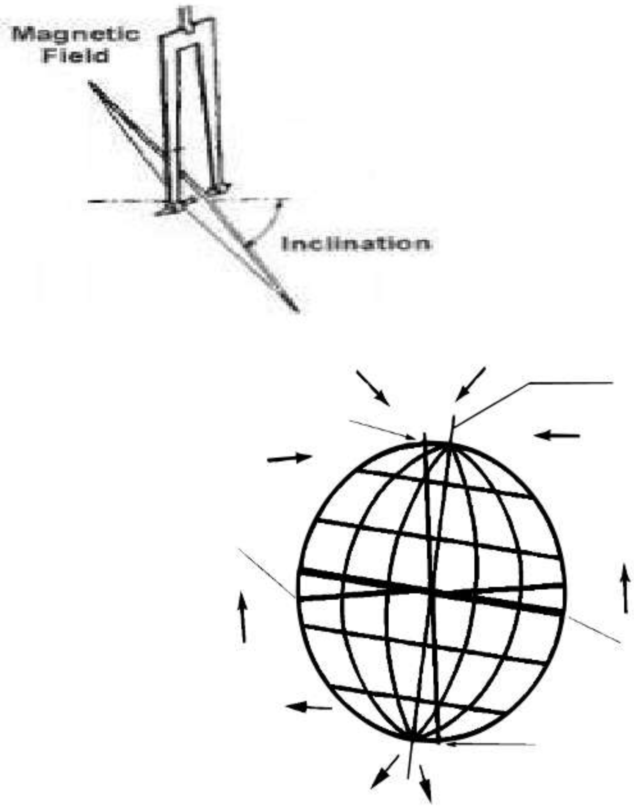

Variation

Since all of our charts are laid out according to the geographic poles, and the magnetic compass points to the magnetic poles, we have an error called variation. To simplify the correction for this error, aeronautical charts are marked with lines of equal variation, called isogonic lines. Anywhere along an isogonic line, there is a constant angle between the magnetic and geographic north poles. The variation error is the same on any heading we fly, andis determined only by the position on the surface of the earth. The correction requiredforvariationerrorisfoundonaeronauticalcharts.

Figure 134:

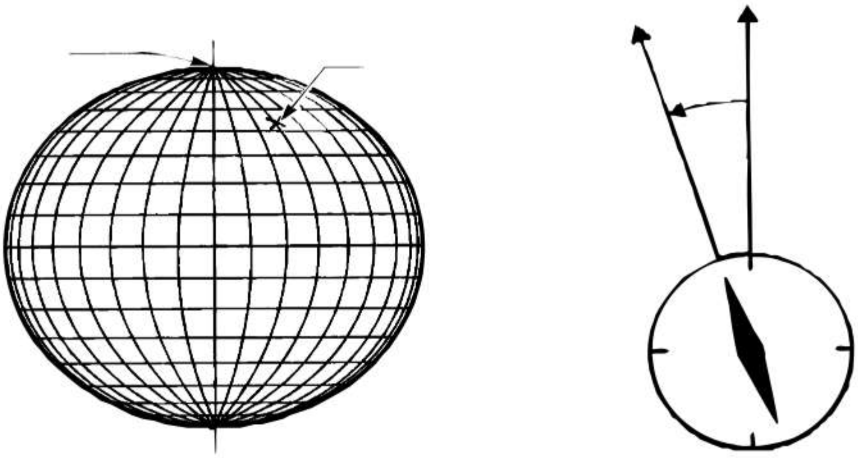

Figure 135:

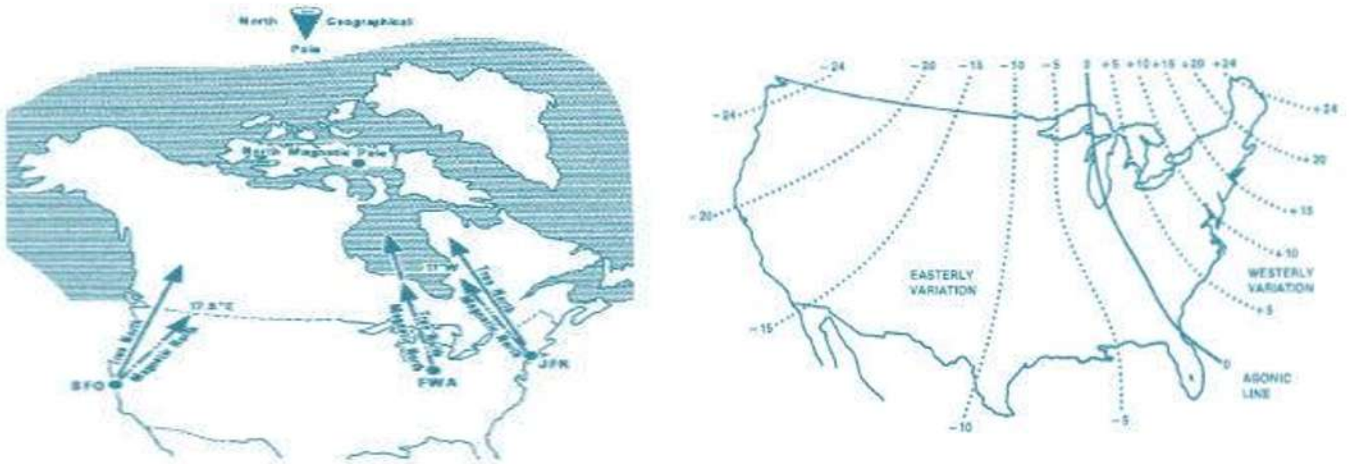

Magnet Compass

The magnetic compass is one of our simpler instruments. Its main body is a cast aluminium housing, and one end is covered with a glass lens. Across this is a verticalreference mark called a lubber line. Inside the housing and riding on a steel pivot in a jewel post is a small brass float surrounded by a graduated dial which is part of a cone. Around the full 360 degrees of the dial are 36 marks, representing the tens of degrees. Above every third mark is either a one- or a two-digit number representing the number of degreeswiththelastzeroleftoff.Zeroisthesameas 360degreesand isnorth.Nineiseast,or90degrees,18 issouth(180degrees),and 27is 270 degrees, or west. Two small bar-type permanent magnets are soldered to the bottom of the float, aligned with the zero and 18 marks, northand south. The housing is filled with compass fluid, which is a hydrocarbon product very similar to kerosene, but with certain additives that keep it clear. The housing must be completely full, with no bubbles, and to prevent damage to the housing when the fluid expands due to heat, an expansion diaphragm or bellows is mounted inside the housing. A set of compensator magnets is located in a slot in the housing outside of the compass bowl, and a small instrument lamp screws into the frontofthehousingandshinesinsidethebowltoilluminatethelubberlineandthe numbers onthe card.

The compass heading is correct if:

- The aircraft ishorizontal.
- There is noacceleration.
- Thereadingiscorrectedwiththe deviation-chard.

Figure136:

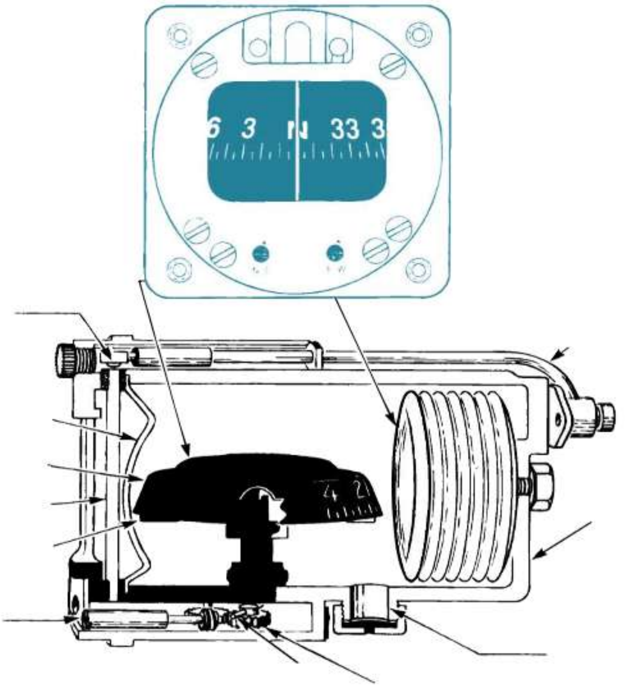

Slaved Gyro Compass

The modern directional gyro, like the gyro horizon, has been combined with other instruments to make it the versatile flight instrument it is today. One of the most useful combinations has been that of slaving the gyro to a magnetic compass. A flux gate, or flux valve, picks up an induced voltage from the earth’s magnetic field and after processing it, directs it to a slaving torque motor in the instrument that precess the gyro and rotates the dial until the airplane’ s magnetic heading is under the nose of the symbolic airplane on the face of the instrument. This slaving gives the directional gyro all of the advantages of a magnetic compass without its most disturbing faults. In the more exotic direction-indicating instruments, the slaved directional gyro is combined with radio navigation systems so it will display information from the VOR, ILS, ADF or Area-Navigationsystem.

Figure 137:

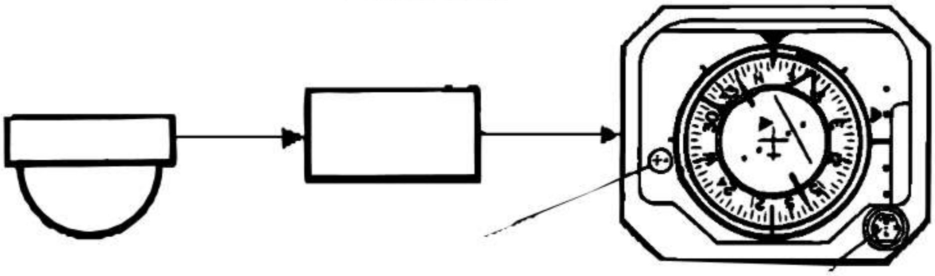

Radio Direction Indicator(RDI)

The direction-seeking portion of the system consists of a flux valve that picks up is directional signal from the earth’s magnetic field. This signal is amplified and sent into a slaving torque motor in the remotely-mounted directional gyro. This motor causes the DG to precess until it indicates the relationship between the nose of the aircraft and the earth’s magnetic field. When the gyro precesses, it drives the rotor of ansynchro transmitter which is electrically connected to a synchro motor inside the compass indicator named: Radio Magnetic Indicator RMI, Radio Direction In- dicator RDI or Horizontal Situation Indicator HSI. That drives the heading dial. By using this mechanism, the actual magnetic heading of the aircraft at any time is shown by the positionoftheheadingdialagainstthelubberline.

Figure 138:

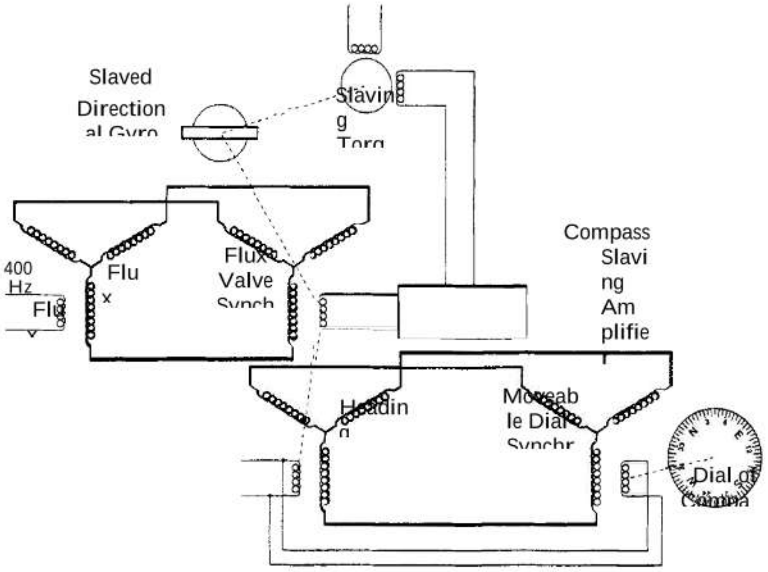

Flux Valve

The flux valve is mounted in a wing tip or other location on the aircraft that has a minimum of magnetic interference caused by various electrical circuits. It has a highly permeable iron frame, or spider, made in the form of a segmented circle with three legs radiating out from its center. An excitation coil is wound around the cent- er of the spider, and pick-up coils are wound around each of the three legs.

The excitation coil is excited with 400 Hertz whose field periodically saturates the arms of the spider and lowers its permeability. When no current flows, the arms are unsaturated and are able to accept lines of flux from the earth’ s magnetic field, but when theyaresaturated,theywillnot.

The position of the flux valve is on a heading of magnetic north. The earth’ s mag- netic field enters the arm of the spider during that portion of the cycle when it can accept this flux and, as the field is alternately accepted and rejected, it cuts across the windings of the pick-up coils and generates a voltage in them. This voltage is amplified and used to drive

the slaving torque motor. As the aircraft turns to anoth- er magnetic heading, the relationship between the flux lines in each of the three

Figure 139: CutView

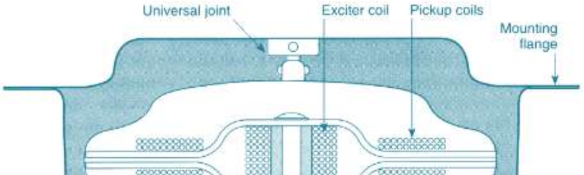

Figure 140: Spider

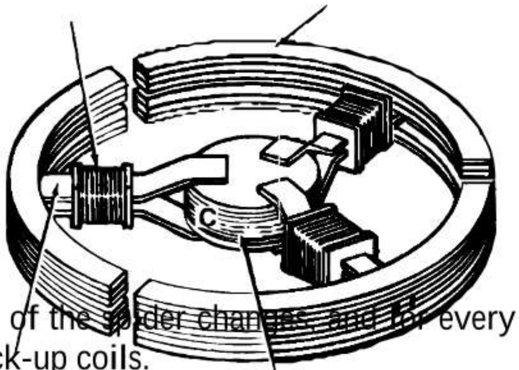

Laminated Collector Horns arms of the spider changes, and for every heading there is a different phase rela- tionship generated in the pick-up coils.

The varying three-phase AC voltage in the pick-up coils is carried into the slaved gyro control has where its output controls the variable phase voltage that is sent into a two- phase slaving torque motor in the directional gyro. This slaving torque motor applies a precise force on the directional gyro that causes it to turn until it satisfies the signal being sent from the flux valve. The synchro system rotates the dial of the RMI until it agreeswiththe signalfromthefluxvalve.

Spokes
Exciter (Primary) Coil

Figure 141: Spider and Earth Magnetic Field

Earth's flux lines

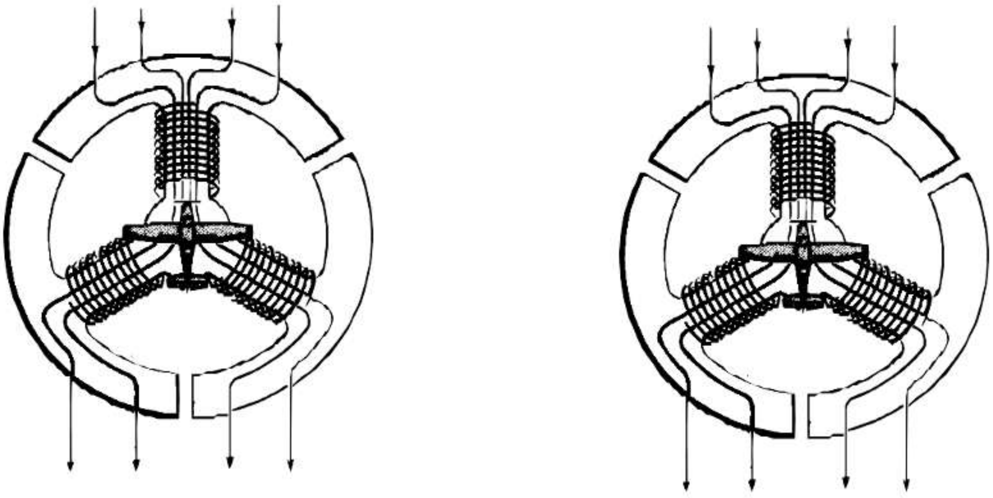

the aircraft is headed north

How the flux valve works

One spider leg of the flux valve frame, including the center post and the exciter winding isshown.

The exciter winding current is at maximum, magnetically saturating the spider leg. The earth's magnetic field is shown surrounding the spider leg in an undistorted pattern. Since the spider leg is already saturated with magnetic current generated by the exciter winding, the earth's field is no more distorted than it would be by passing through air or glass.

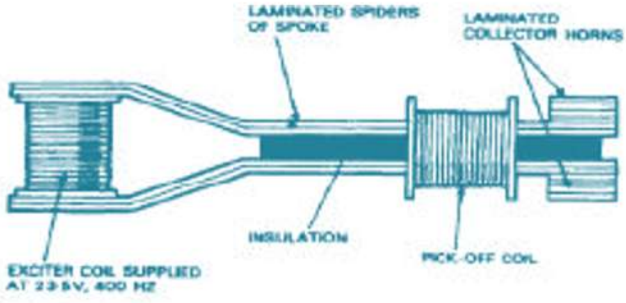

The exciter current has reached a null, and the spider legs have no magnetic flux from the exciter current. The earth's field sees this leg as a path of less reluctance (magnetic resistance) and is drawn into the spider leg.

The exciter current has again reached maximum and has driven the earth's field out of theleg.

Asignalcoilisshownwrappedaroundthespiderlegandtheconditionisthesameas in left firstfigurewithnoneoftheearth'sfieldinthespiderleg.
The exciter current has reached a null. While the earth's field was moving into the leg it was cutting the windings of the signal coil. This is the same action performed in a transformer or generator to produce a voltage. While the field was cutting the windings of the signal coil, it generated a voltage of a particular polarity because the direction of movement of the earth's field was inward.

The exciter current at maximum and the spider leg saturated. This time the earth's field moved outward, so the polarity of the generated voltage was reversed.

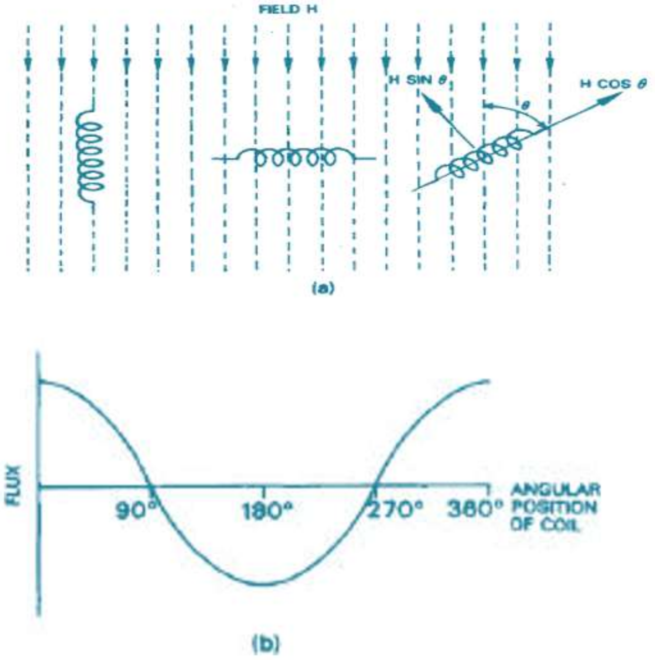

Theexciter windingusesavoltagederivedfromaircraftpowerwithits frequencyof400 Hertz. The effect on the earth's field movement is the same whether the spi- der leg is saturatedwithmagneticcurrentofonedirectionortheother.

1. Excitationfluxgoesthruzero.

Theironcoreisnotsaturated.(lowreluctance)The earthfluxpassesthe ironcore.

Between 1 - 2 the excitation flux increases. Due of increasing saturation of the iron, the earth magnetic field begins to drive out of the core.
Maximum voltage is induced.
2. Excitation flux is themaximum.
The iron core is saturated. (high reluctance)
The earth magnetic field is displaced out of the core.
Between 2 - 3 the excitation flux decreases. Due of decreasing saturation of the iron, the earth magnetic field begins to go back in the core.
Maximum voltage is induced.
3. Excitationfluxgoesthruzero.
The iron core is not saturated. (low reluctance) The earth flux passes the iron core.
The exciter current reaches a maximum twice during each cycle and a null twice during each cycle, the frequency of the earth's field-induced signal in the signal coil is double the frequencyof the exciter voltage (800Hz)

Figure 142: Moving Coil in a constant Field will not cause a Output Voltage

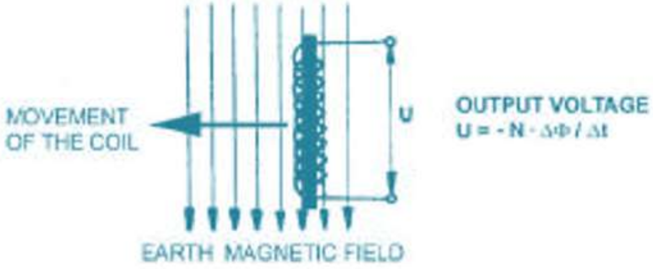

The principle of voltage generation with a coil moving (flying) in a magnetic field can notbe applied for compass systems. The flux Φ should be alternatively increased and decreasedoverashorttimeperiodΔt,toinduceanoutputvoltageU.Themagneticfield of theearthcanbeassumedasahomogeneousfieldwith:
35 µT = 35 µVs/m2 = 0.35 Gauss

Figure 143: Saturation of Iron will displace the Earth Magnetic Field

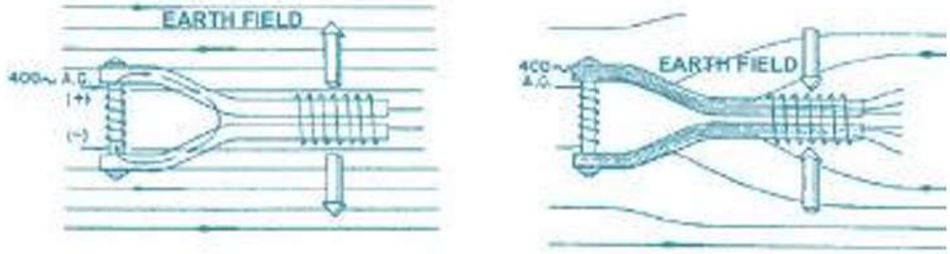

Figure 144: Excitation, Magnetic Flux in Iron and Signal Output

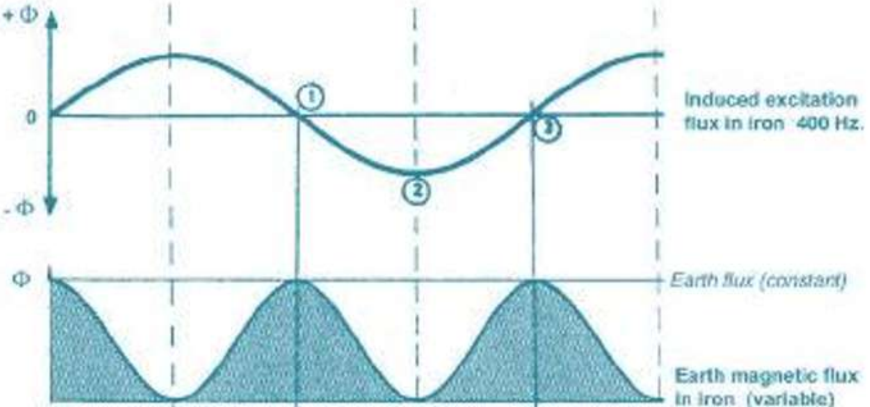

Compass Systems

Light Aircraft

The flux valve is located in the aircraft tail or wing tip to prevent any influence of magnetic field induced by electric currents. The flux valve senses the direction (heading) of the earth magneticfield.

The heading is routed to a synchro. If the directional gyro is not coinciding with the earth magnetic field, a synchro output voltage is applied to slaving amplifier. The gyro torque motor produces a force to the gyro gimbal. The DG moves by precession to the actual magnetic heading direction.

As long the compass is not synchronized with the earth magnetic field, the synchronisation indicator is deflected toward + or -. For quick synchronisation the pilot rotates the DG direction by SYN knob in + or - direction until the synchronization indicator is centred. Then the heading dial coincides with the flux valve angle information.

Figure 145:

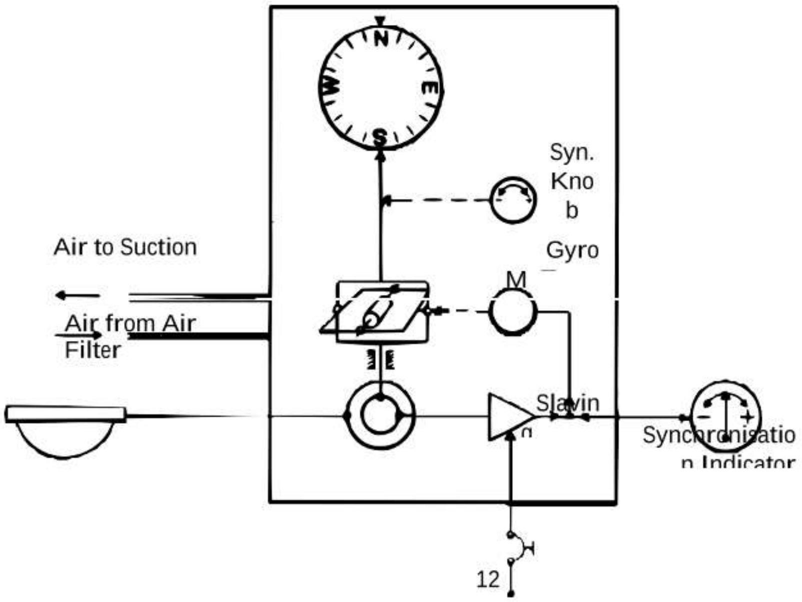

MD-80 Compass System

Forredundancytwoindependentcompasssystemsareinstalled.

CaptainsRDIandfirstofficersRMIisprovidedfromcompass1

CaptainsRMIandfirstofficersRDIisprovidedfromcompass2

If one of both system fails, each crew member has still one compass read-out.

Ifbothsystemfailedbothpilotshastoreadtheheadingfromamagneticstand-by compass.

The Instrument amplifier gets the flux valve heading and slaves the directional gyro as long the mastershaftdoes not coincide. The direction of the directional gyro is repeated to the mastershaft. Four heading synchros feeding the heading to the display and other systems.

Figure 146: Lay Out

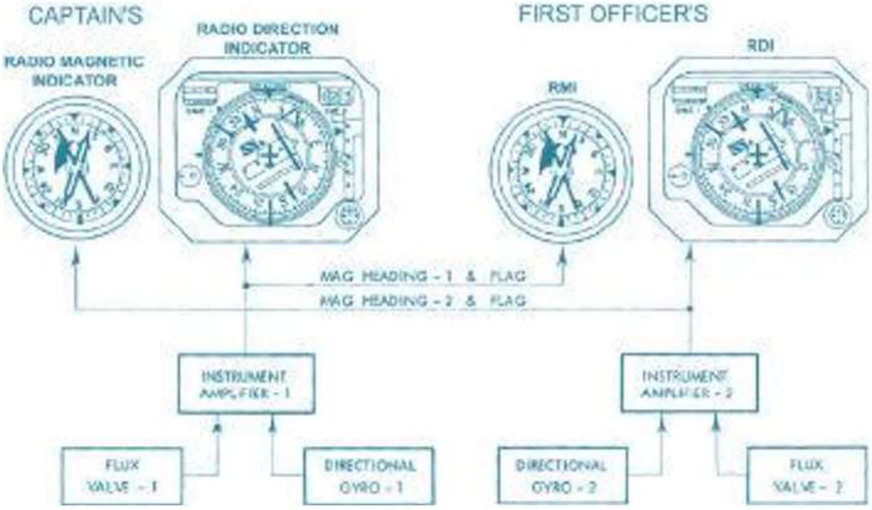

Figure 147: Gyro stabilized Compass

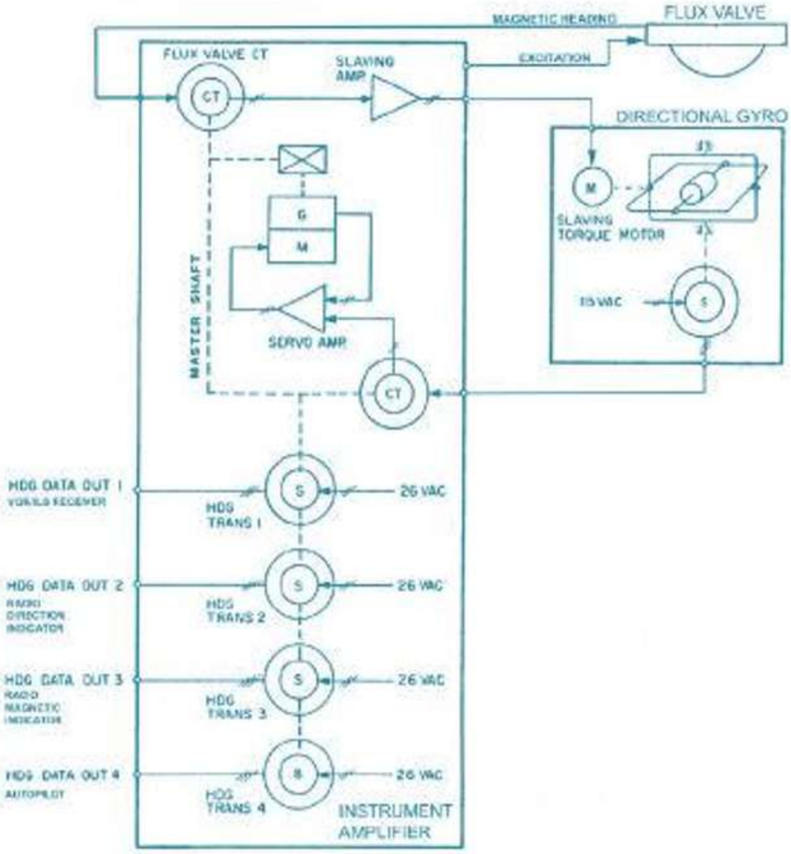

Manual synchronisation of compass system In the previous example has a disadvantage.
The slaving rate of the directional gyro is very slow (2° - 5° per minute). This caus- es a very long synchronisationtime after applying electrical power. Lets assume the position of mastershaft is 170° apart from flux valve signal. The synchronisa- tionwill take more than onehour.
To fast synchronizing the compass, the user may manually rotate the DG output signal. After this is done the gyro is not directed to magnetic north but together with the rotation angle of the differential synchro it represents the heading reference.
The synchronisationannunciator shows a plus or dot if the compass is not syn- chronized.RotatingtheknoblocatedontheRDIinthesamedirectionwillsynchro-nizeto the correct direction. If the knob is rotated opposite the annunciated + or dot, the compass will show 180° wrong because of the second (wrong) null posi- tionof a synchro controltransformer.

Figure 148: Indicator with Synchronizing Knob and Annunciator

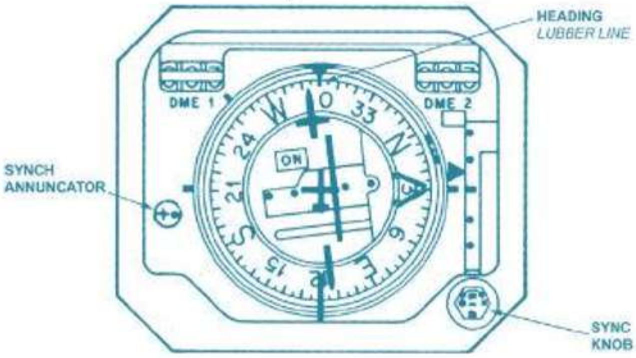

Figure 149: Compass with Synchronisation

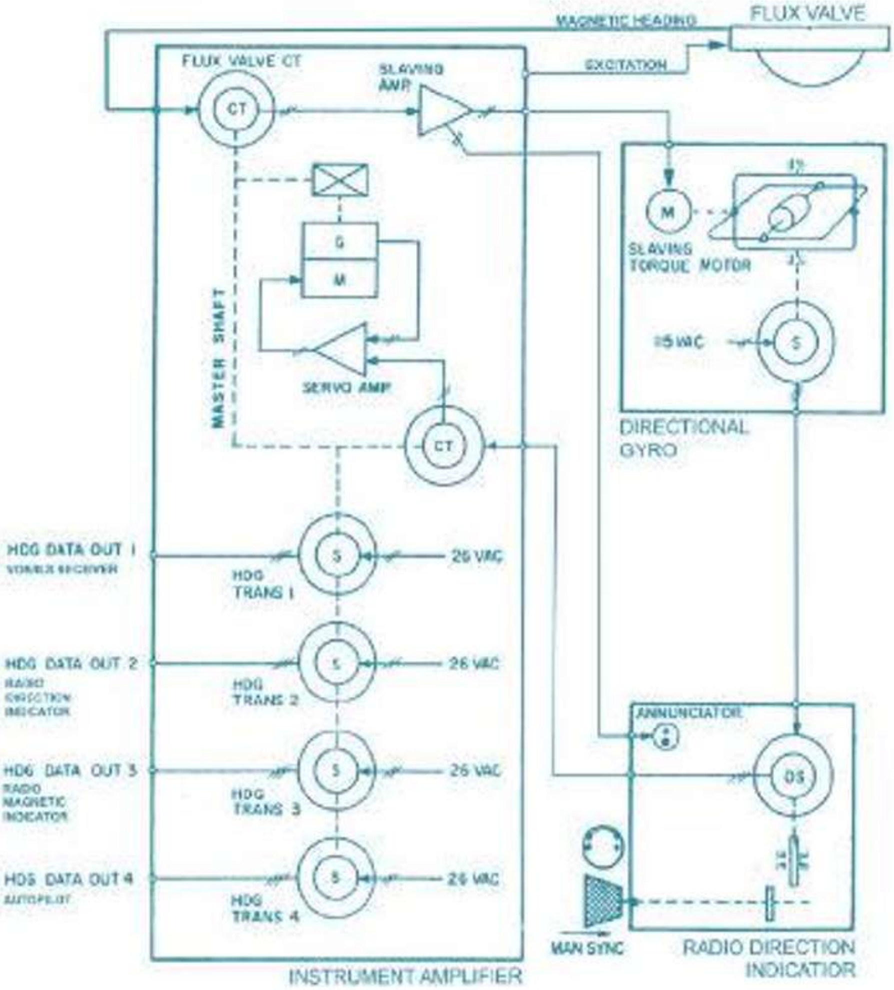

New Technology

The IRS part of the ADIRU provides aircraft heading to the EFIS and DDRMI. The magnetic heading is derived from true heading. Magnetic variations are stored inside IRS memory. No flux valves are used any more. The DDRMI Dual Distance Radio Magnetic Indicator shows magnetic heading from ADIRU 1 or ADIRU 3.

Figure 150: Layout

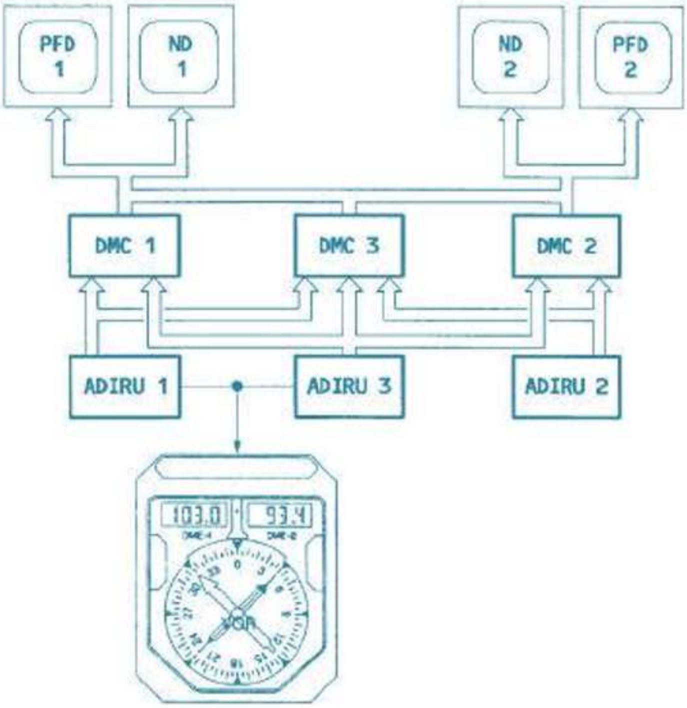

PFD and ND showing the magnetic or depending of aircraft and operation mode the true (directed to geographic north) or magnetic heading. If the ND operates in PLAN- mode, the horizontal situation is directed true north upward.

Figure 151: Glass Cockpit

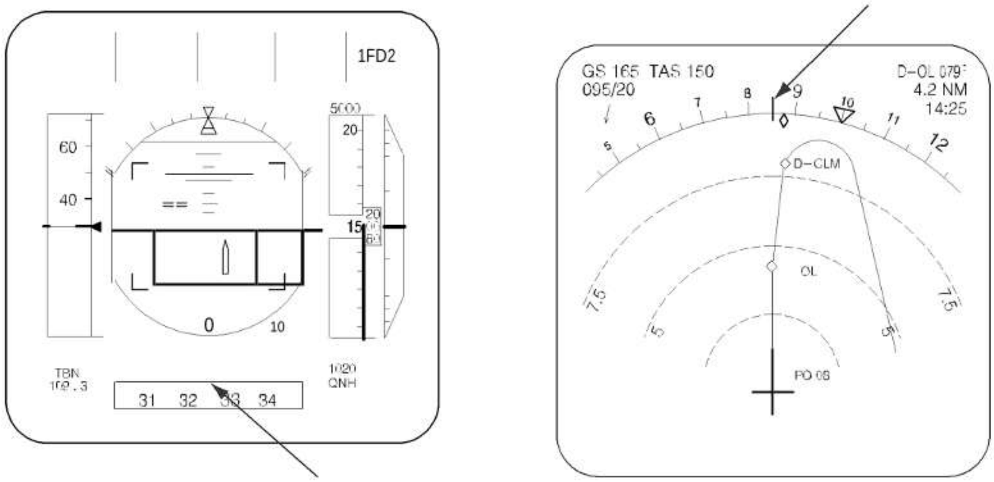

AIRCRAFT HEADING

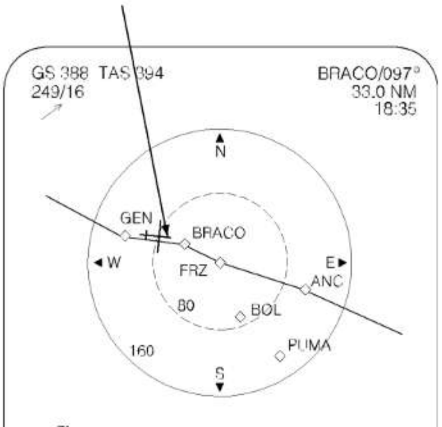

Compass Errors

Deviation and its Compensation

The error inherent in magnetic compasses is called deviation, and it is caused by the magnetic fields in the aircraft interfering with those of the earth. A magnetic field surrounds any wire carrying electricity, and almost all of the steel parts of an aircraft and the engine have some magnetism in them. Magnetos and both alternators and generators have strong magnets in them, and these are all so close to the compass that they influence it.

Figure 152:

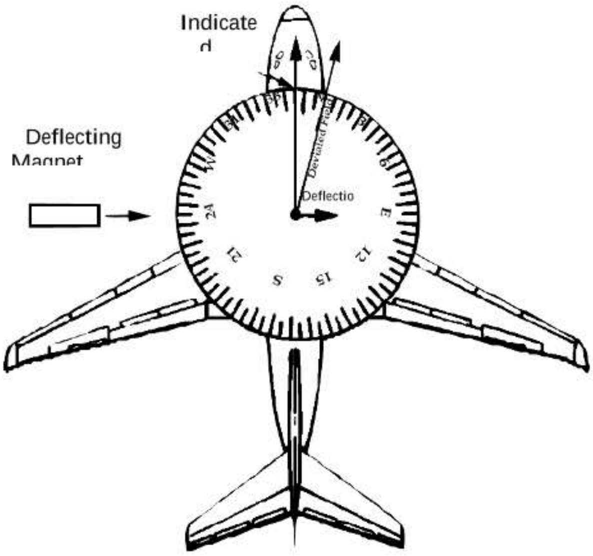

Error Compensation and Error Chart

Aircraft compasses are equipped with two or more small compensator magnets in the housing. They may be adjusted to cancel the effect of all of the local magnetic fields in the aircraft. Any uncorrected error caused by this local magnetism is called the deviation error, and it is different for each heading we fly, but it does not change with the location of the aircraft. The magnetic compass must be compensated to reduce the errors. After the error has been minimized, a chart is made of the error that remains, and it is slipped into a holder mounted on the compass bracket or on the instrument panel adjacent to the compass so the pilot will be able to apply the correction in flight.

Figure 153: Local Compass Compensator with Magnets

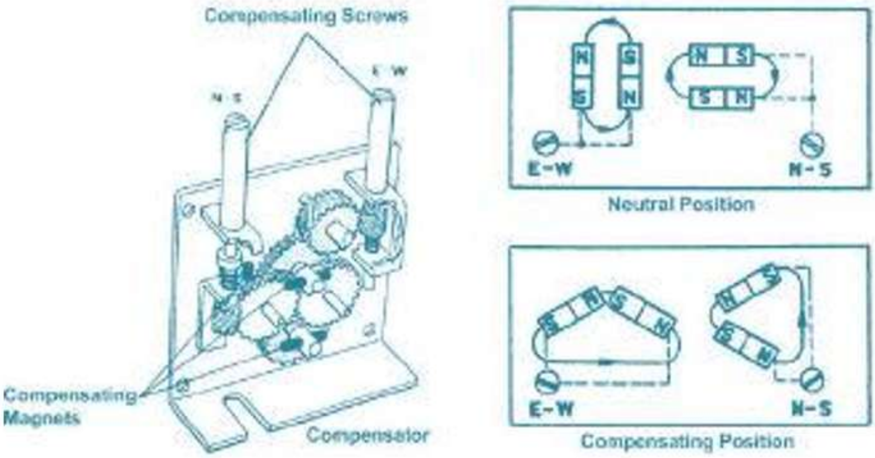

Figure 154: Compass Error Chart, Deviation and Variation

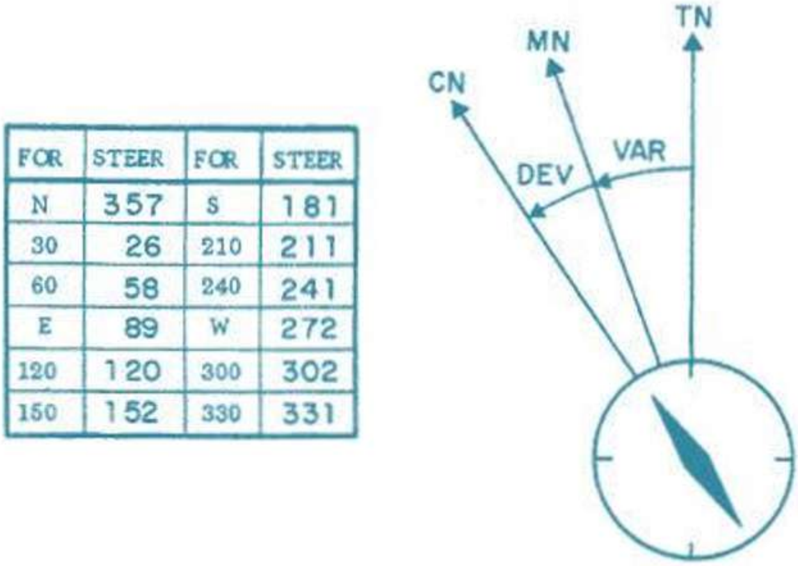

FOR	STEER	FOR	STEER
N	357	S	181
30	26	210	211
60	58	240	241
E	89	W	272
120	120	300	302
150	152	330	331

- Deviationisthedifferencebetween:

DirectiontoMagneticNorthPoleMN(2000kKm.awayfromTN)and Indicated compass headingCN
The deviation can be compensated and/or with an error chart corrected.

- Variation is the direction difference between: True NorthTN(GeographicNorthpole)andMagneticNorth PoleMN(2000km.awayfromTN)

The variation depends from aircraft position and is not compensable.

CompassErrorsOverview

Figure155:Index-,OneCycle-andTwoCycleError

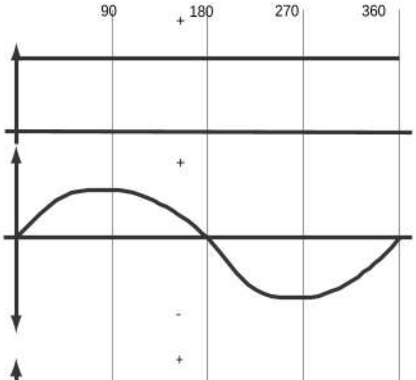

Index error
Causing: Misalignedinstallationofcompassorfluxvalve.

Remote compensators with special adjustment (INDEX)
One cycle error
Causing: Magneticfieldsinducedbyelectricwiresormagnetizedsteelparts.
Correction: Compensating magnets or calibrated currents thru the flux valve.
Remote compensators with special adjustment (N-S/E-W)

HEADING

Causing: Deflectionoftheearthmagneticfieldlinesbysteelpartslikescrews.
Asymmetricimpedanceofthecablefromfluxvalvetothesystem.
Correction: Using of messing screws and non ferro-magnetic materials around. Remotecompensatorswithspecialadjustment(TRANSMISSION)

HEADING

Coriolis
Causing: RotationoftheearthdeflectingthecompassofaN-Smoving aircraft'scompassorfluxvalve.
Correction: None. This small influence can not be compensated.
Remote compensator
Installedincommercialaircraftmakescompensationofcompasserrorseasier.

Figure 156: Remote Compensator

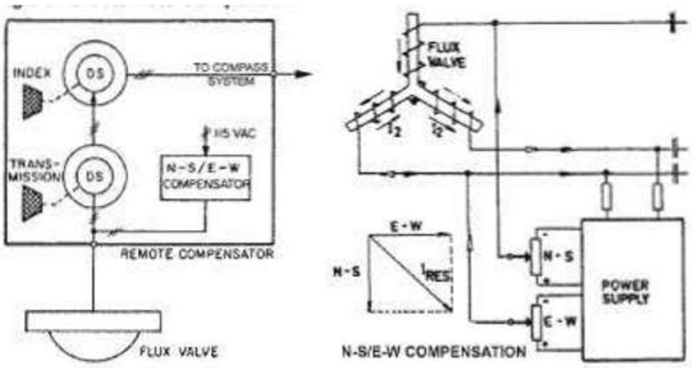

Flight Data Recording
The flight data recorder is crash proof in order to withstand an accident, records the mandatory parameters. Early recorders etched the vertical acceleration, alti- tude, speed, heading and time in a heat resistant and impact protected metall foil.
Todaythedigitalrecordergetsabout50mandatoryparameterviaflightdatainterfaceunitandtheparameterarestoredfor25-50hoursonamagnetictapeorsolid statememory.
Theunderwaterlocatorbeaconwilltransmita37kHztoneifitisimmersedinwater to locatetherecorderafteranaccident.

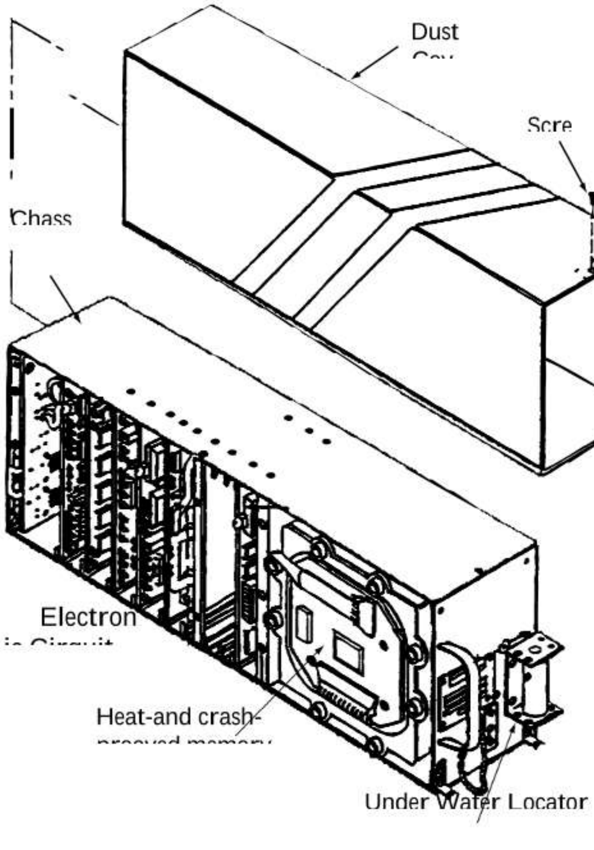

Typical Flight Data Recording System

The purpose of the Digital Flight Data Recorder System (DFDRS) is to record var- iouscritical flight parameters in a solid state memory to fulfil the mandatory re- quirementsof crashrecording.

The DFDRS basically includes a Flight Data Acquisition Unit, a Flight Data Re- corder (FDR), a Linear Accelerometer, an Event push button and a control panel to meet the minimum requirements.

TheFlightDataAcquisitionUnitisacomputerwhichcollectsvariousbasicAircraft Systemparametersandconvertsthembyinternalprocessing.

The flight data recorder is located in the rear part of the aircraft. It stores, in a solid statememory the data of the last 25 hours collected by the FDAU. The memory board is located in a mechanical protected box. The front face of the FDR includes an Underwater LocatorBeacon.

(FDAU) via various system computers. The information about the aircraft is given to the FDAU directly by pin programming.

The Linear Accelerometer is installed at the aircraft center of gravity to provide the three axes acceleration data.
When pushed, the EVENT push button is used to record an event mark in the Flight Data Recorder (FDR) memory. The EVENT push button is located on the pedestal.

Power Interlock. The Flight Data Recorder is automatically supplied with power when one engine is started and will stop five minutes after the last engine shut-down.
For test and maintenance purposes on ground as well as for preflight check, it is possible to supply power to the FDR by pressing the ground control push button on the overhead panel.

Figure 157: System

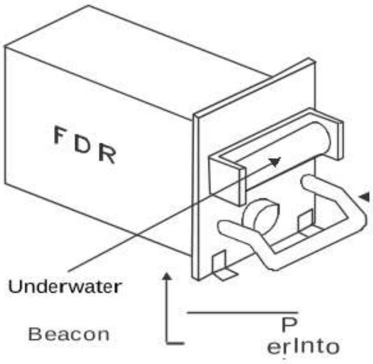

Aircraft Systems

The Flight Data Acquisition Unit collects many different mandatory parameters for recording. Today about 300 parameters are recorded. In earlier versions between 6 and 50.
Here some example:

- 21: Temperatures, Pressures, Airflows
- 22: Engagement and Operational Modes
- 23: HF VHF Transmission Activities (PTT)
- 24: Power Distribution Configuration, Switching
- 26: Fire and Smoke Warnings
- 27: Various Flight Controls
- 28: Configuration, Quantities
- 29: Pressure, Quantity, Temperatures
- 30: Configuration, Pressure, Temperatures
- 31: Warnings, Time
- 32: Configuration, Brake
- 34: Airdata, Position, Heading, ILS, Warnings
- 36: Configuration, Pressure, Temperature
- 70: EGT, EPR, N1, N2, Oil Temp, Thrust

The parameter input is in following format:

- analog
- digital
- discrete

Three Axis Accelerometer

The three axes accelerometer detects acceleration along the longitudinal, the lateral and the vertical axes. The unit is at the center of gravity of the aircraft.

The unit has for each axes a sensor. The sensor has a bar, which bends, when there is an acceleration. The resistance value of the strain gauge changes when the bar bends. The strain gauge is a part of a resistance bridge and results in a change in the output voltage.

Or the acceleration force moves a pendulum in the sensing mechanism. The de- tector forces the sensing-mass always to center position. The current from the am- plifier is proportional with the acceleration.

Figure 159:

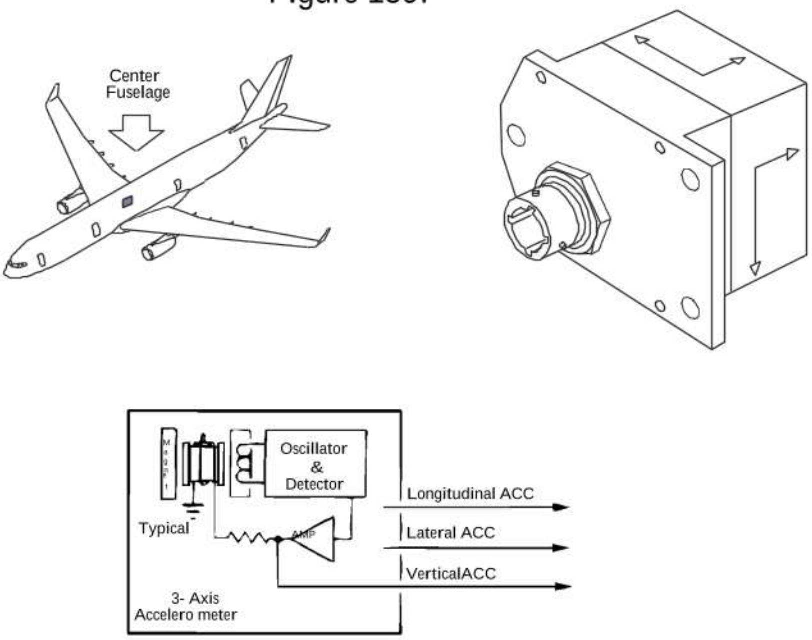

Underwater Locator Beacon

You find the underwater locator beacon on the front panel of the flight data record- er. The beacon has a high impact case which contains: - a mercury battery - a wa- ter sensitive switch - an electronic timer module - a piezo - electric transducer.

Afterwaterentryittransmitseveryseconda37,5kHzpulse.Therangeofthebea-con is2 miles in any direction and the system operates for about 30 days. At one side of the beacon is an end cap with the name BATTERY ACCES, the other end cap contains the water switch. Keep the switch end of the beacon clean and re- place the battery when the label"REPLACEBATTERYBY:"tellsyoutodoso.

Figure 160:

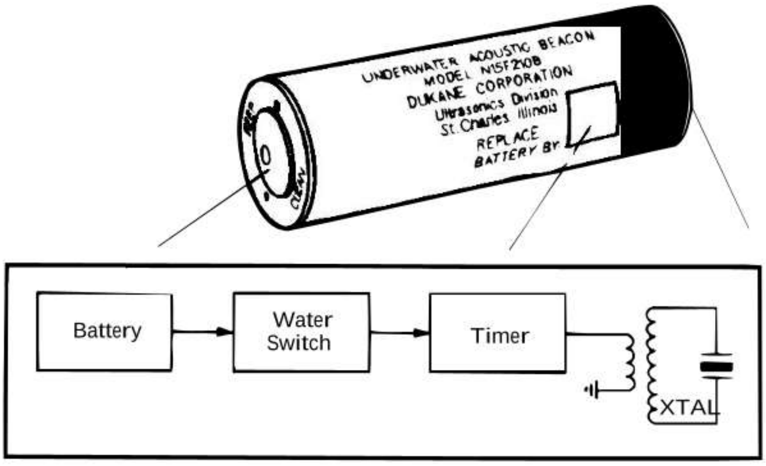

X Axis Longitudinal or Forward

Z Axis Vertical or Up
Z Axis
Y Axis Lateral or Outboard
Water Switch
Battery Replacement Date Label
Battery Access Cap
28V DC EX
Form FDAU

Figure 161: Flight Data Recorder and Tape Cassette (mechanical)

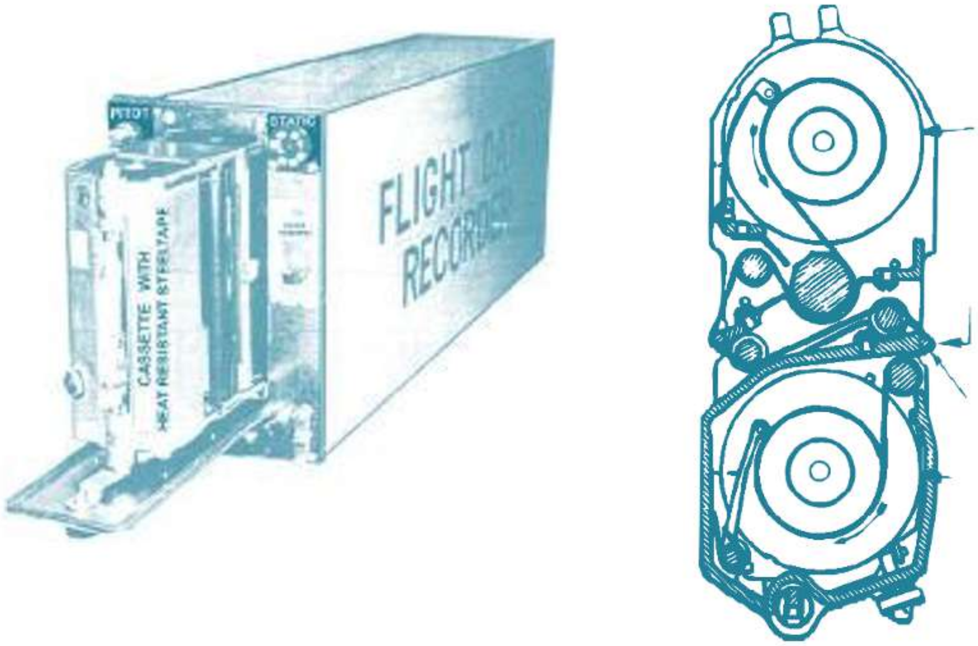

Figure 162: Functional Principle of ancient Flight Data Recorder

Roller

Take-Up Spool

Vertical Accelerometer

HF/VHF COMM
Push to Talk

Magnetic Heading

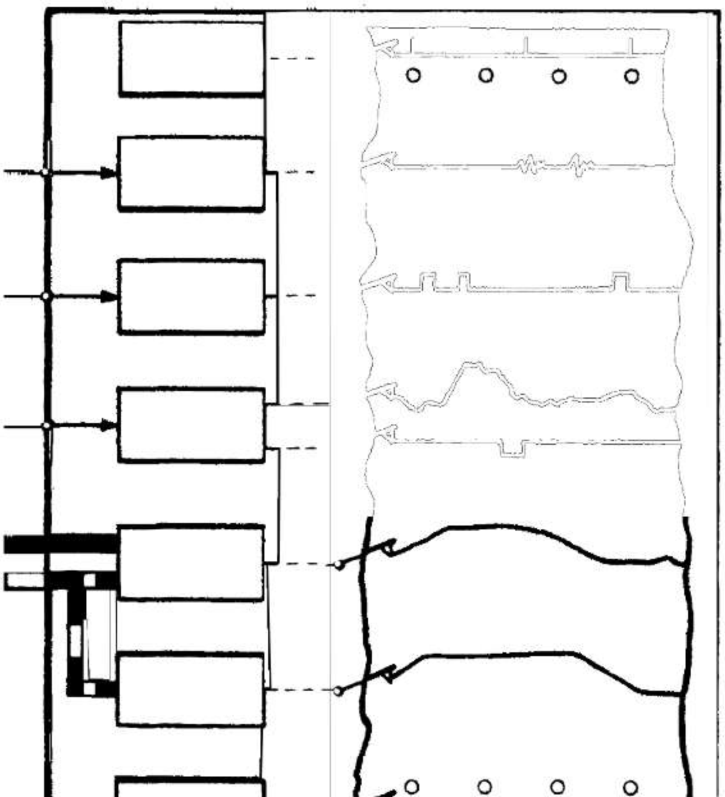

Acceleration Circuit

Flight data recorders are developed since world war II. In the 1960ties the recorder scratched the most parameters with diamond needles in to a heat resistant metal foil. The metal foil has to be replaced when it was filled up with data.

For accident research, it was a time consuming work to find all missing tape frag- ments

Figure163:DigitalFlightDataRecorderDFDR(withTape)

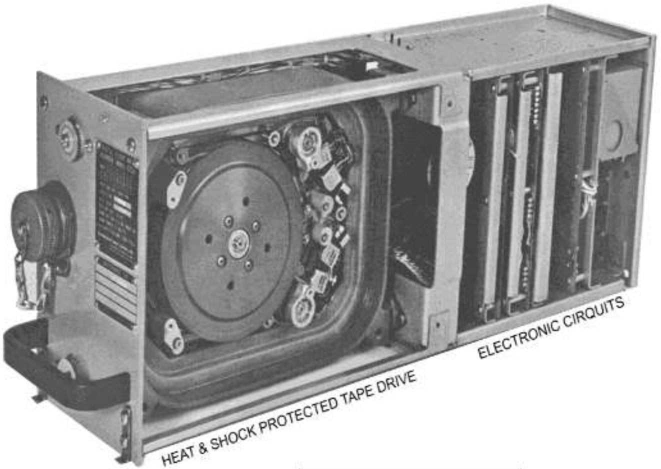

Figure164:SolidStateDigitalFlightDataRecorderSSDFDR

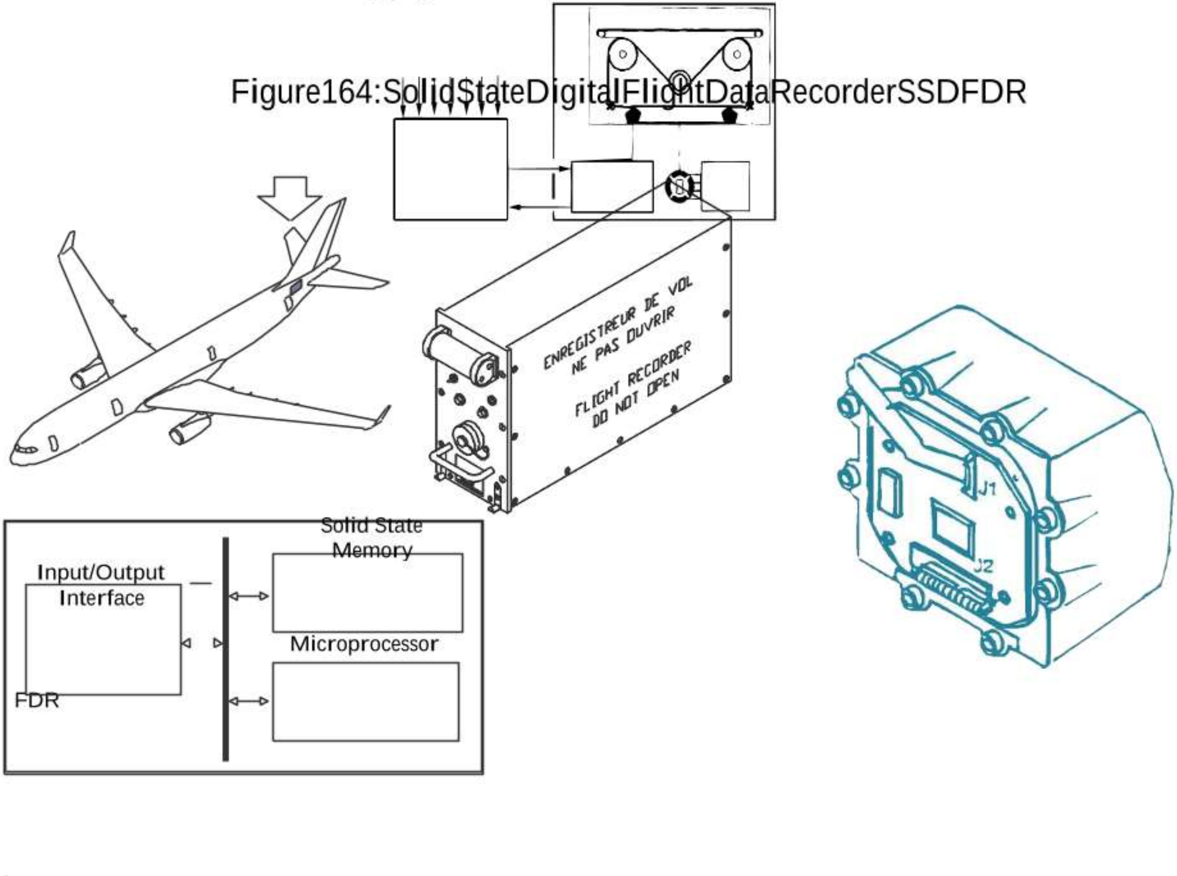

Recording Tape
Parameter Inputs
Flight Data Aquisition Unit
Parameter

Plaback

Recording Capacity: 25 Hour
Heat resistant: 1100°C for 30 minutes
Shock resistance: Tape: 100 G Solid State: 3400 G for 6 ms Saltwater proof: 6000 meter for 1 month
Mean Time Between Failure MTBF: Tape 7000 hrs. Solid State 15’000 hrs.

ADAS - AIDS - ACMS

The AIDSAircraft Integrated Data System or ADAS Aircraft Data Acquisition System
or ACMS Aircraft Condition and MonitoringSystem
accepting a large amount of engine and aircraft system data for the analysis for trouble shooting, system engineering, procedure evaluation and flight crew sec- tions by ground computer.
The data are stored on magnetic tapes or optical disks. A printer prints the aircraft data. On request data may be transmitted to the homebasevia ACARS. The MCDU ’s are usedtooperatethe syste

Fundamentals of Automatic Flight Control Introduction

Early automatic pilots were primarily pilot relief devices, which did little more than hold theaircraft straight and level. The introduction of transistorized electronics permitted dramatic changes in the size, weight, and power requirements of automatic pilots. The automatic pilothas grown to become a system that is utilized in all phases of flight and has, as such, acquired its more modern identification as an Automatic Flight Control System.

Commercial Aircraft

The Automatic Flight Control Systems or AFCS, in modern jet transport are all uniquely tailored to the specific aircraft, but all share common features. For example, the flight aerodynamics of an MD-11 is different from those of an A320; however, both aircraft would most likely require an "attitude hold" mode of operation. In this case, the attitude hold feature is common to both autopilot designs, but "gains" in the two autopilots will differ to accommodate the differences in the aerodynamics of each aircraft. Each AFCS receives attitude and heading signals from an attitude and a directional gyro and has its own rate gyro/accelerometer system to develop attitude and flight path stabilization signals. The AFCS computers comprise an electronic "brain" that receives signals from its "senses" to compute the proper responses and provides outputs to electric and/or hydraulic actuators that are then "muscles" which move the aircraft's controlsurfaces.

Smaller Aircraft

The need for Automatic Flight Control in smaller aircraft has producedautopilotswith varying degrees of complexity; from simple single-axis "wing levellers" in smallsingleengined aircraft, all the way up to three-axis systems for corporate jet aircraft that haveasmany features and functions as those systems found on jet transport aircraft. Autopilots, from the simple to the complex, have undoubtedly reduced pilot workload and mental fatiguethroughoutall areas of the flight envelope.

Automatic Flight System

The term Automatic Flight System encompasses a large array of functional systems, fromsimple single-axis stability augmentation such as a 'wing leveler' to a complete autopilot flightmanagementand guidance system, as well as theindependentflight systems such as auto trim,yaw damper and machtrimsystems.

Elements of Automatic Flight Control

Figure 2.2is a functional diagram of a closed-loop system which is basic to all classes ofautomaticflight control systems, and from this we note that there are four principal elementswhichtogether are allocated the task of coping with what is generally termed "inner loopstabilisation" The individual functions of the elements are asfollows:

- Sensing of attitude changes of the aircraft about itsprincipal axes by means of stablereferencedevices;e.g. gyroscopes and/oraccelerometers;
- Sensing of attitude changes in terms of error signals andthe transmission of suchsignals;
- Processing of error signals and their conversion into a form suitable for operation of theservomotorsforming the output stage;
- Conversion of processed signals into movement of the aircraft flight controlsurfaces.

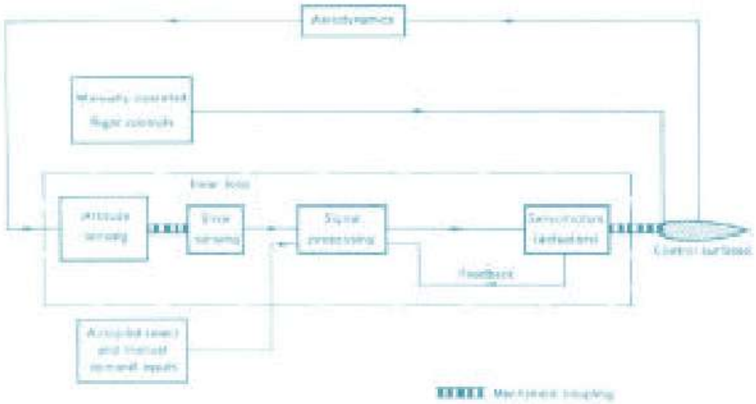

Fig. 2.2Basic automatic flight control schematic

The number of control loops, or channels, comprising an automatic control system is dependenton the number of axes about which control is to be effected.

Axis of Automatic Flight Control

Based on the number of axes about which control is affected, it is usual to classify systems in the following manner;

Single-axis

in which altitude control is normally about the roll axis only; the controlsurfaces forming part of the one and only control loop are, therefore, the ailerons. Such acontrol system is the most basic in concept, and it is used in a number of types of small fixed-wing aircraft for lateral stabilisation, or wing-levelling, as it is frequently termed. Thepilot can inject command signals into the control loop thereby enabling him to turn the aircraft automatically. In some cases, signals from a compass system and from radionavigation equipment are also injected into the loop so that magnetic headings, andtracking capability can be automatically-maintained; such operating modes are known asheading-hold and radio-coupling respectively, and form part or the outer loopcontrol.

Two-axis

in which attitude control is, in most cases, about the roll and pitch axes; thecontrol surfaces forming part of the two loops are, therefore, the ailerons and elevators.Manual turn control, heading-hold and radio-coupling facilities are normally standard features in any one design with, in some cases, an additional facility for selecting andholding a specificaltitude.

Three-axis

in which attitude control about all three axes is carried out by specificallyrelated control channels of an automatic flight controlsystem.

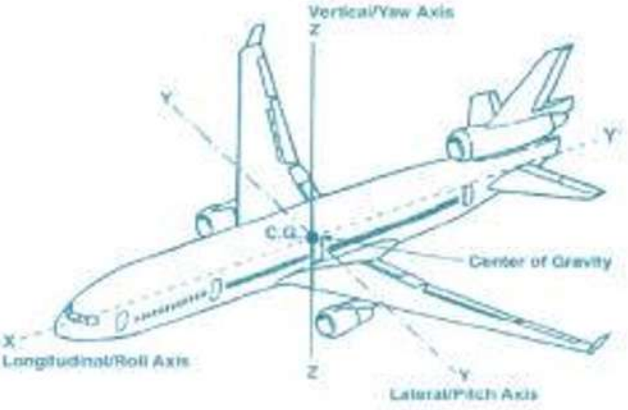

Fig. 2.3Axis of control Feedback Controls

Feedback controls are widely used in modern automated systems. A feedback control system consists of five basic components;

- input
- process beingcontrolled
- output
- sensingelements
- controller and actuatingdevices

The input to the system is the reference value, or set point, for the system output. Thisrepresents the desired operating value of the output. Using for example a heating system; theinputis the desired temperature setting for a room. The processbeing

controlled is the heater.
In other feedback systems, the process might be a steering system or the engines of an aircraft.Also, the automobile engine in cruise-control, or any of a variety of other processes to whichpoweris applied, the output is the variable of the process that is being measured and comparedtothe input; in the above example, it is roomtemperature.

Sensing Elements

The sensing elements are the measuring devices used in the feedback loop to monitor thevalueof the output variable. In the heating system example, thisfunctionis normallyaccomplishedusing a temperature sensor. There are many different kinds of sensors used infeedbackcontrol systems forautomation.

Controller and Actuating Device

The purpose of the Controller and Actuating Device in the feedback system is to compare themeasured output value with the reference input value and to reduce the difference between them. In general, the controller and actuator of the system are the mechanisms by whichchanges in the process are accomplished to influence the outputvariable.

Control Loops Inner loop

The inner control loop stabilizes the aircraft attitude around the pitch or roll axis.

Outer loop

The outer control loop controls the aircraft in lateral and vertical direction (i.e. airspeed,altitude, track, interception of radio beam etc.)

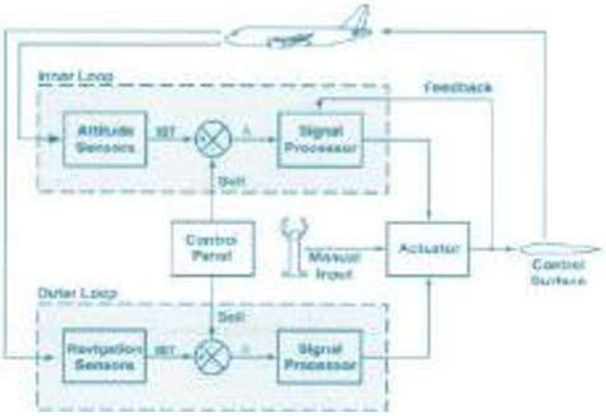

Fig. 2.4 Inner and outer control loops

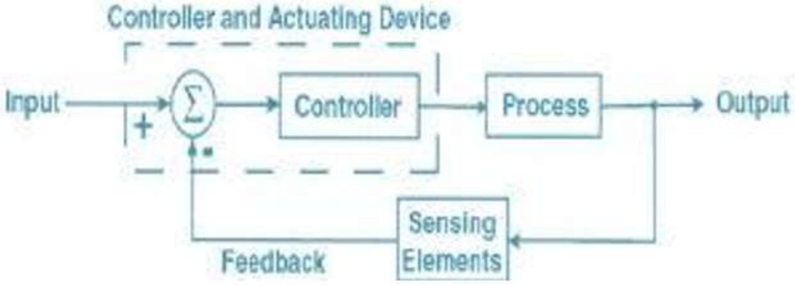

Fig. 2.5 Control Loop Synchronisation Autopilot not engaged

During this time, when the human pilot steers the aircraft manually,the attitude reference provides the actual attitude information (2) to the autopilot computer. Theoutput of the

internal summing point is fed back, instead of the input (1), to
“wash out” any built-up signal to the servo.

- This mode is called synchronization. The synchronization is necessary to prevent anyjerks of the flight controls at the moment of autopilotengagement.
- A disengaged autopilot synchronizes with the actual aircraft attitude, therefore theautopilotmust bealways electrically powered and functionally operative.

Autopilot engaged
The navigation system and sensors provides a steering command (1) totheautopilot computer. The summing point feeds the steering order (3) to the servo. The aircraft reaction is sensed by the attitude reference and acts as feedback (2) to the summingpoint.

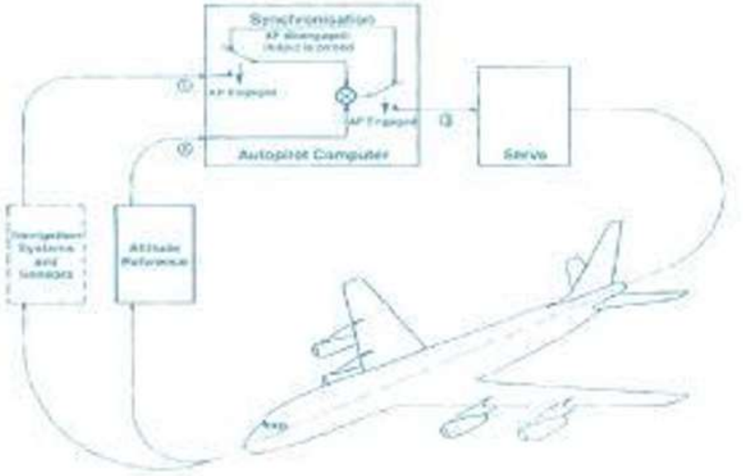

Fig. 2.6 Loops - autopilot disengaged and engaged

Automatic Flight Control Systems Control Channels

In its basic mode of operation, the function of an AFCS is to hold an aircraft on a desired flightpath, by detecting and correcting any departure from that path; in other words, it functions as astability augmentation system (SAS).

If the attitude of the aircraft changes as a result of, say, an air disturbance or an out-of-trimconditionof the aircraft, the attitude sensing elements will detect this change and their associated command signal sensor elements will translate the change into an error signal. Thesignalis fed to the relevant control channel amplifier in the signal processing element and afteramplificationit is supplied to the servo-actuator so that it can apply corrective control. Forexample, if the error signal is caused by a change about the pitch axis, nose down as shown inFigure 2.7the signal is processed by the pitch control channel and fed to the pitch servo-actuator which repositions the elevators to correct the attitudechange.

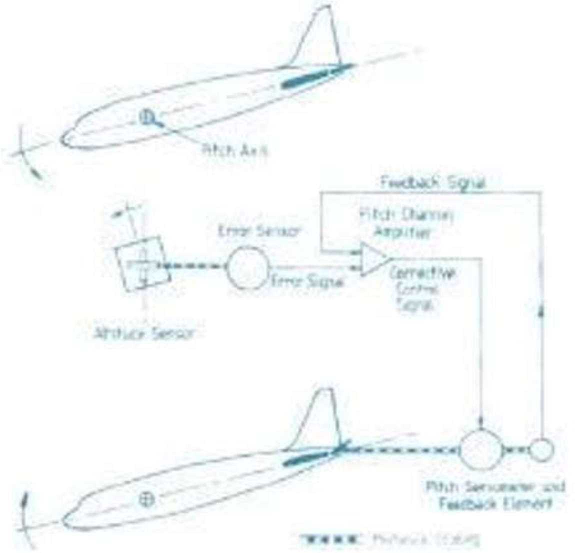

Fig. 2.7Sensing and correction of an attitude change

The servo-actuator also repositions a feedback or follow-up element the purpose of which is to reduce an input error signal and thereby limit the control applied. Thus, the feedback element produces a signal equal and opposite to that of the input error, thereby limiting servo-actuator operation until it stops with the elevators in the angular position required to return the aircraft to the level flight attitude. As the aircraft returns, the error signal decreases and the feedback signal, via the amplifier, now causes the servomotor to reduce the angular position of the elevators towardsneutral.

A similar sequence takes place when an error signal is caused by a change about either the roll or yawaxes

Control Panels

In addition to turn and pitch control facilities, a control panel also incorporates a switch forengaging the servomotors to the aircraft's primary flight control system; and examples are shown in Figure 5.288, 5.289, 5.290,5.291.

Fig. 2.8Examples of autopilot control panels

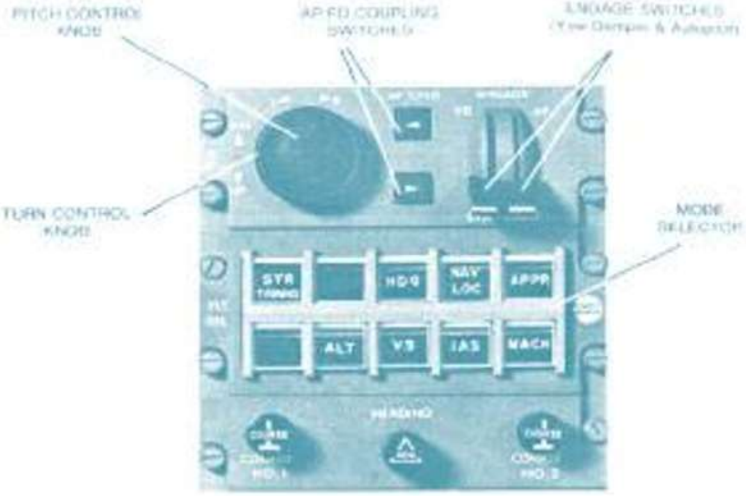

Fig. 2.9Control and mode selector panel

Fig. 2.10 Examples of a modern Mode Control Panel

In some aircraft, the AFC and FD systems, although utilisingcommon data sources, are in fact controlled from separate controlpanels.

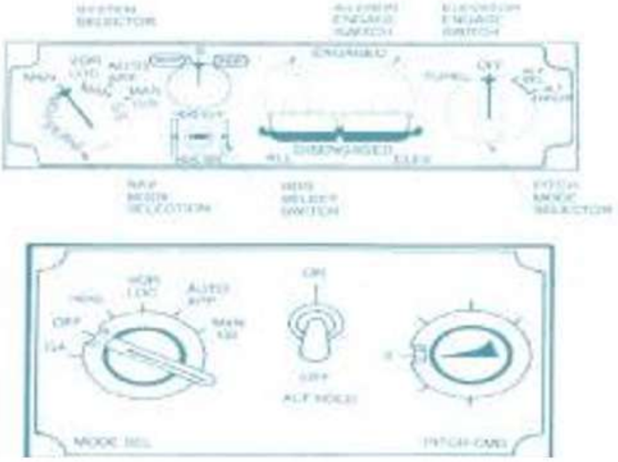

Fig. 2.11 Autopilot/flight director system control

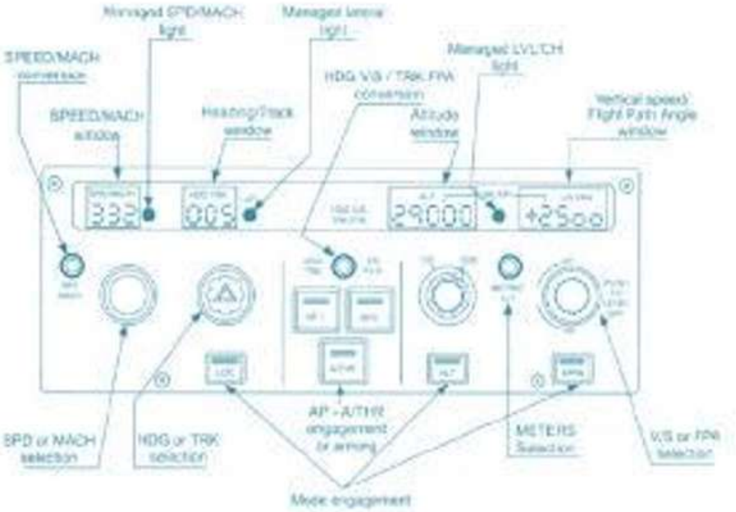

Fig. 2.12Airbus A330 Autopilot MCP

Fig. 2.13Examples of Autopilot MCPs

Example - Boeing 737 IMG

The following describes the operation of the controls of the MCP starting from the left (Captainsside) of thepanel.

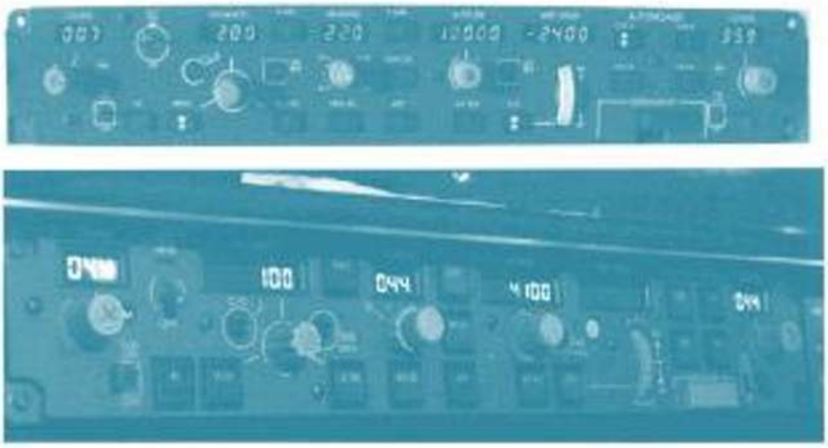

Fig. 2.14Boeing MCP Course

There are two course controls on the MCP, one on each side. They are used to allow the pilot toselectthe relevant VOR or ILS course. The left course selector is used for the left NAV displayscreenand the right control is used for the right NAV display screen. The control is made upfrom a rotary switch and an LED 3-number readout ranging from 0 degrees to 359 degrees. Tochange, rotate the switch anti-clockwise to decrease the course, or clockwise to increase thecourse. The course selected is displayed on the LED indegrees.

FD switch

To the right of the Course control is the FD Switch. This is a simple ON-OFF switch thatoperates the Flight Director (seen as a Magenta Cross onthe main instrument HSI display).

Operation is Up for ON and Down for OFF. A second FD switch is on the right side of the MCPforco-pilot use. They operate the FD in each respective FCC (A and B) and can be usedindependentlyof eachother.

When both FDs are operated together, one remains the master. This is the FD that wasoperatedfirst or if the correspondingA/P was set to CMD. If a pitch difference is sensedbetween the A and B computers that exceeds approx2-4 degrees, or the roll exceeds 3-9degrees the FD command bars will disappear from the display until the difference returns towithinthe parameters. This functionality only operates in TOGA or approach mode. Thisfunction is also inhibited when the aircraft is on the ground, one of the FDs are affected byelectricalbus transfer or failure of either one of theFDs.

A/T switch

To the right of the FD Switch is the Auto Thrust Control. This is made up of a simple ON-OFFswitch, an LED to annunciate the ON position. This control engages or disengages the A/T.Once disengaged the LED annunciator will go out.

N1 button

This is an LED lit push button. Operation is push for ON, push for OFF. N1 is the speed of theengine fan and is an approximation of the engine thrustWhen the N1 button is activated, the A/T maintains the required N1 (thrust) limits selected in theFMC. When it is active, N1 is annunciated on the Flight Mode Annunciator Display forA/TMode.

Speed control

The next control is the Speed control comprising of a 3-digit LED display, a rotary switch, N1Button, Speed Button, a Level ChangeButtonandaC/Obutton.Thiscontroloperatesand

controls the speed when the A/T is engaged only, it cannot control speed unless the A/T isarmed. Speed can only be controlled if the AFDS operating mode is compatible. When it is active, the A/T mode displays MCP SPDThe 3-digit LED presents the pilot with the target speed (not the actual speed of the aircraft) thisspeed is displayed as IAS or Mach No (displayed as a % of Mach 1). The rotary switch changesthe speed value displayed. Turn the switch anti-clockwise todecrease displayed speed andclockwise to increase it. Below the rotary switch are 2 LED lit push buttons. These buttons are marked N1 and SPEED respectively. They are simple Push ON and Push OFF buttons (ON-OFF). The button is fitted with an LED that lights when the button operation is active and not on when inactive. The SPEED button, when ON (LED lit) indicates that the speed in the 3 digitdisplay is active. Above the N1 and SPEED buttons is a small push button marked C/O. When pressed it toggles the speed displayed in the 3-digit LED between Mach and IAS in Knots. IfMach is active the 3-digit display indicates the Mach speed as a decimal value (i.e. .73 indicatesthe speed as 73 % of Mach1).

Level change (LVL CHG)

The Level Change (LVL CHG) button is a simple push ON push OFF button with an LED toindicate it is active. This function works in conjunction with the A/T and FMC to initiate the change in altitude / Flight Level selected on the Altitude display (cleared Altitude/FL). Whenactivated the A/T enters its ARMED Mode. Speeds in the climb or descent are controlled by theA/T providing it is engaged, otherwise limits need to be entered manually.

VNAV

Above the LVL CHG button is the VNAV button. This is a

Simple push ON push OFF button and an LED is displayed when it is active. When the VNAV button is active and the A/P is active, theFMC is controlling the vertical profile of the aircraft in forward flight.

Heading

The next control is the Heading Control. This comprises a 3- digit LED display, 1 rotary switchand 1 HDG SEL Button. In addition it has an engraved scale around the rotary switch.

The 3 digit LED provides a display of heading in compass degrees ranging from 0 – 359degrees. The display heading is altered by rotating the rotary switch anti-clockwise to decrease heading and clockwise to increase heading. The rotary switch has a scale engraved on thepanelindicating the maximum bank angle. The scale on the left is the exact opposite to the scale on the right. This is so that the maximum bank angle is equal on either side. Below therotaryswitch there is a button marked HDG SEL. (Heading Select). When this button is active(LED ON), the heading is controlled by the pilot based on what he/she has selected on thedisplay. When it is OFF, the heading is being controlled by the data in the FMC (A/P active).

LNAV

To the right of the Heading controls are 3 push buttons lit by LED. The top button is markedLNAV. When the button LED is lit, the LNAV control is active and controlling the lateral profile ofthe aircraft in forward flight. This means that the heading and track is being controlled by thenavigationdata entered into the FMC before or during theflight.

VOR LOC (VorILocaliser Capture)

The second button in the three is the VOR LOC button. This button is a push ON push OFFbutton and works in conjunction with the FMC and the frequencies set on the Navigation radios. VOR = VHF Omnidirectional Radio LOC = Locator. This button also has an LED displayedwhenthe VOR LOC function is active. The VOR antenna on the aircraft picks up the relevantsignaland automatically selects the "Mode" (VOR or ILS) based on the frequency set. This thensendscommands to theA/Ptointerceptapredeterminedradialandtrackalongit.

APP (APPROACH)

Below the VOR LOC button is the APP Button. Againthis is a simple push ON push OFF button with an LED that is lit when the APP function is active. When this function is active, it uses the single frequency set on one or more of the NAV Radios to follow an approach path. The frequency set is the ILS frequency for the specified runway and provides a radio beam defining the approach descent to the runway. When APP is active, it establishes the aircraft on the glide slope and tracks down the beam to the runway threshold. It can be done using only one NAV radio set on the ILS frequency, however, it is general practice to use both NAV radios with both the Captain's and First Officer's A/P engaged. Once the localizer is captured the light will extinguish on the APP button and the A/P will follow the captured glideslope. If for some reason you wish to disconnect the APP activity once the glideslope is captured, there are only three ways to dothis:

- Disengage the A/P and bothFDs
- Tune the NAV frequenciesout
- Press the TO/GAbutton

Altitude

This control comprises a 5-digit LED display, a rotary switch and an ALT HLD button with LEDlight.
The function of this control is to allow the pilot to set the aircraft altitude manually. Turn therotaryswitch anticlockwise to decrease displayed altitude and clockwise to increase displayedaltitude. To execute the displayed altitude press the LVL CHG button. To hold the existingactual altitude, the pilot can press the ALT HLD button. When this function is active the LED onthe button islit.

Vert Speed

The Vertical Speed comprises a rotary wheel, an LED lit push button and a 7-digit LED display. It is armed by pushing the LED lit V/S button. When active, the V/S mode automatically engages the A/T in Speed mode which then sets the thrust to achieve the vertical rate selected by the pilot. However, if the rate selected exceeds the available thrust (N1 limit) then the speedwill decrease. V/S mode will not operate if ALT HLD is engaged or following the glideslope capture.

A/P Engage / Disengage

Each of the A/P has a button marked CMD and acorrespondingCWS button. If the A/P is inCWS mode it will still function provided there is no roll or pitch mode selected. The pilot canoverride the A/P in CMD mode into CWS by applying sufficient force to the control column. InCWS Mode, the A/P will hold the aircraft attitude as commanded by the pilot unless the rollattitudeis less than 6 degrees. If this is the case the aircraft will level the wings and hold its heading. However, this heading hold function is not available below 1500 ft. RA, in a gear downprofile, following a VOR capture at less than 250 Kt TAS or following a glideslope capture inApproachmode (APP). The latter can be achieved if theaircraftisinCWSmodebutineachofthesecasestheCMD

mode is reactivated.
Finally, there is an A/P Disengage/Engage bar. When in the UP (Engaged) position the A/P canbeoperated normally. When it is in the DOWN position (Disengaged) it disconnects both A/P sand prevents the pilots from re-engaging the A/P with either the CMD or CWSmodes.

Fig. 2.15PFD example, with autopilot annunciation Radio Communication – General

Radio Transmission Theory

A transmitting antenna sends the radio signal into space toward the receiving antenna. The pathin space that the radio signal follows as it goes to the receiving antenna is the propagation path.

The receiving antenna intercepts or receives the signal and sends it through a transmission lineto the receiver. Thereceiverprocesses the radio signal so the human ear can hearit.

When transmitting, the radio operator aims to provide the strongest possible signal at the site ofthe receiving station. The best possible signal is that signal which will provide the greatestsignal-to-noise ratio at the receiving antenna.

Propagation Velocity (Speed)

Radio waves travel near the surface of the Earth and radiate skyward at various angles to theEarth's surface. These electromagnetic waves travel through space at the speed of light,approximately 300,000 kilometres (km) or 186,000 miles (mi) per second.

Wavelength

Wavelength is the distance between the crest of one wave and the crest of the next wave. It canalso be the length of one complete cycle of the waveform. It is also the distance travelled duringone complete cycle. The length of the wave is always measured inmeters.

Radio Frequency

The frequency of a radio wave is the number of complete cycles that occur in one second. Thelongerthe cycle, the longer the wavelength and the lower the frequency. The shorter the cycle,theshorter the wavelength and the higher the frequency. Frequency is measured and stated in units called hertz (Hz). One cycle per second is stated as1 hertz. Because the frequency of a radio wave is very high, it is generally measured and statedinthousands of hertz (kilohertz [KHz]) or in millionsof hertz (megahertz [MHz]). One KHz is equal to 1,000 cycles per second, and 1 MHz is equal to a million cycles persecond.

Sometimes frequencies are expressed in billions of hertz (gigahertz [GHz]). One GHz is equalto a billion cycles per second. For practical purposes, the velocity of a radio wave is consideredto be constant, regardless of the frequency or the amplitude of the transmitted wave.

Therefore, to find the frequency when the wavelength is known, divide the velocity by thewavelength. To find the wavelength when the frequency is known, divide the velocity by thefrequency. Frequency (hertz) = 300 million (meters per second) Wavelength (meters)Wavelength (meters) = 300 million (meters per second)Within the radio frequency spectrum, radio frequencies are divided into groups or bands of frequencies. The radio frequency spectrum is part of the electromagnetic spectrum. Most radiosetsoperate within a 200 to 400-MHz range within the frequency spectrum. Each frequencybandhas certaincharacteristics.

The ranges will change according to the condition of the propagation medium and thetransmitter output power

Modulation and Single Side Band Transmission

Radio communications equipment is used primarily to transmit voice and data. Although soundcan be converted to audio frequency electrical energy, it is not practical to transmit it in thisenergy form through the Earth’s atmosphere by electromagnetic radiation.

For example, efficient transmission of a 20-hertz audio signal would require an antenna almost8,000 kilometres (5,000 mi) long. This would not apply when radio frequency electrical energy isused to carry the intelligence. When radio frequency electrical energy is used, great distancescan be covered; efficient Antennas for radio frequencies are of practical lengths; and antennapower losses are at reasonable levels. Thefrequency of the radio wave affects its propagation characteristics. In the low frequency band (0.03 to 0.3 MHz), the ground wave is very useful forcommunications over great distances. The ground wave signals are quite stable and show littleseasonal variation. In the medium frequency band (0.3to

3.0 MHz), the range of the groundwave varies from about 24 kilometres (15 mi) at 3 MHz, to about 640 kilometres (400 mi) at thelowest frequencies of thisband.

Sky wave reception is possible during the day or night at any of the lower frequencies in thisband. At night, the sky wave is receivable at distances up to 12,870 kilometres (8,000 mi). In thehigh frequency band (3 to 30 MHz), the range of the ground wave decreases as frequencyincreases, and the sky waves are greatly influenced by ionospheric considerations. In the very high frequency band (30 to 300 MHz), there is no usable ground wave and only slight refractionofsky waves by the ionosphere at the lower frequencies. The direct wave provides communications if the transmitting and receiving antennas are elevated high enough above thesurface of the Earth. In the ultrahigh frequency band (300 to 3,000 MHz), the direct wave mustbe used for all transmissions. Communications are limited to a short distance beyond thehorizon. Lack of static and fading in these bands makes line of sight reception very satisfactory. Antennas that are highly directional can be used to concentrate the beam of radio frequency(RF) energy, thus, increasing the signalintensity.

Modulation

Both amplitude modulation (AM) and frequency modulation (FM) transmitters produce RF carriers. The carrier is a wave of

constant amplitude, frequency and phase which can be modulated by changing its amplitude, frequency, orphase.

Thus, the RF carrier “carries” intelligence by being modulated. Modulation is the process of superimposing intelligence (voice or coded signals) on the carrier. Amplitude Modulation Amplitude modulation is the variation of the RF power output of a transmitter at an audio rate. In other words, the RF energy increases and decreases in power according to the audio frequencies superimposed on the carrier signal. When audio frequency signals are superimposed on the radio frequency carrier signal, additional RF signals are generated. These additional frequencies are equal to the sum of, and the difference between the audiofrequencies and the radio frequency used. For example, assume a 500 KHz carrier is modulated by a 1 KHz audio tone. Two new frequencies are developed, one at 501 KHz (thesum of 500 KHz and 1 KHz) and the other at 499 KHz (the difference between 500 KHz and

1KHz).

If a complex audio signal is used instead of a single tone, two new frequencies will be set up foreach of the audio frequencies involved. The new frequencies resulting from superimposing an audio frequency (AF) signal on an RF signal are called side bands. When the RF carrier ismodulated by complex tones such as speech, each separate frequency component of the modulating signal produces its own upper and lower side band frequencies.

The side band that contains the sum of the RF and AF signals is called the upper side band(USB). The side band that contains the difference between the RF and AF signals is called the lower side band (LSB). The space occupied by a carrier and its associated side bands in theradio frequency spectrum is called a channel. In amplitude modulation, the width of the channel (bandwidth) is equal to twice the highest modulating frequency. Forexample,ifa5,000KHz(5MHz)carrierismodulatedbya

band of frequencies ranging from200 to 5,000 cycles (0.2 to 5 KHz), the upper side band extendsfrom 5,000.2 to 5,005 KHz. Thelower side band extends from 4,999.8 KHz to 4,995 KHz.

Thus, the bandwidth is the difference between 5,005 KHz and 4,995 KHz, a total of 10 KHz.

Frequency Modulation

Frequency modulation is the process of varying the frequency (rather than the amplitude) of thecarrier signal in accordance with the variations of the modulating signals. The amplitude or power of the FM carrier does not vary during modulation.

During reception of the FM signal, the amount of deviation determines the loudness or volumeofthe signal. The FM signal leaving the transmitting antenna is constant in amplitude but variesin frequency according to the audio signal. As the signal travels to the receiving antenna, itpicks up natural and manmade electrical noises that cause amplitude variations in thesignal.

Single Side Band Transmission

The intelligence of an AM signal is contained solely in the side bands. Each side band contains all the intelligence needed for communications. Therefore, one side band and the carrier signal can be eliminated. This is the principle on which single side band (SSB) communications is based. Although both side bands are generated within the modulation circuitry of the SSB radio set, the carrier and one side band are removed before any signal istransmitted.

The side band that is higher in frequency than the carrier is called the upper side band (USB).The side band that is lower in frequency than the carrier is called the lower side band(LSB).

Either side band can be used for communications as long as both the transmitter and thereceiver are adjusted to thesame

side band. Most SSB equipment operates in the USB mode. The transmission of only one side band leaves open that portion of the RF spectrum normallyoccupied by the other side band of an AMsignal.

This allows more emitters to be used within a given frequency range. Single side bandtransmission is used in applications when it is desiredto;

- obtain greaterreliability;
- limit size and weight ofequipment;
- increase effective output without increasing antennavoltage;
- operate a large number of radio sets without heterodyne interference (e.g., whistles andsqueals) from radio frequencycarriers;
- operate over long ranges without loss of intelligibilitybecause of selectivefading.

Frequencies

Crystal resonators are small chips or sticks cut in a special way from a crystal. Pressure or pullon the crystal surface cause electrical charge displacement and thus electrical voltages (Piezo-effect). Conversely, if an alternating voltage is applied to the crystal, it begins to oscillate mechanically.The resonant frequency of the oscillations is highly stable and depends upon the mechanical dimensions of the crystal.

Radio frequencies up to 300GHz are divided into decade ranges. Each decade is designated asa frequency band. Radar frequencies are divided into special radarbands.

Designation and abbreviations of radio frequencies:

- RF - Radio Frequency(Carrier)
- IF - IntermediateFrequency
- OF - OscillatorFrequency
- AF - Audio Frequency RadarBands

L-band radars

Operate on a wavelength of 15-30 cm and a frequency of 1-2 GHz.

S-band radars

Operate on a wavelength of 8-15 cm and a frequency of 2-4 GHz. Because ofthe wavelength and frequency, S band radars are not easily attenuated. This makes themusefulfor near and far range weather observation. The National Weather Service (NWS) uses Sband radars on a wavelength of just over 10 cm. The drawback to this band of radar is that itrequires a large antenna dish and a large motor to power it. It is not uncommonforan S banddishto exceed 25 feet insize.

C-band radars

Operate on a wavelength of 4-8 cm and a frequency of 4-8 GHz. Because of thewavelengthand frequency, the dish size does not need to be very large. This makes C band radars affordable for TV stations. The signal is more easily attenuated. Also, due to the smallsizeof the radar, it can be portable. The frequency allows C band radars to create a smallerbeam width using a smaller dish. C band radars also do not require as much power as S bandradar. The NWS transmits at 750,000 watts of power for their Sband.

X-band radars

Operate on a wavelength of 2.5-4 cm and a frequency of 8-12 GHz. Because ofthe smaller wavelength, the X band radar is more sensitive and can detect smaller particles.Mostlarge

aeroplanes are equipped with X band radar to pick up turbulence and other weatherphenomenon. This band is also shared with some police speed radars and some spaceradars.

K-band radars

Operate on a wavelength of 0.75-1.2 cm or 1.7-2.5 cm and a correspondingfrequency of 27-40 GHz and 12-18 GHz. This band is split down the middle due to a strongabsorption line in water vapour. This band is similar to the X band but is more sensitive. Thisband also shares space with police radars.

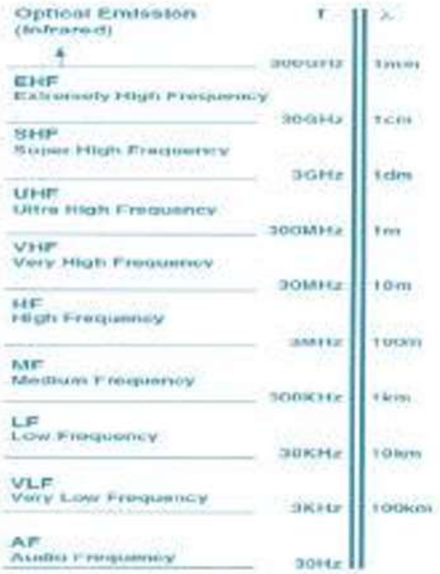

Fig. 2.16Radio frequency bands

Antennas

Regardless of the quality of the equipment, no radioinstallationis better than its antenna. Eachpieceof equipment must have a specific antenna, and this antenna must be mounted in aspecificlocation for the most efficient operation.Most

antennas are used for both reception andtransmitting.
The length, polarization, and location of an antenna are ofextreme importance in getting themost efficient transmission and reception from the installed equipment. The types of antennasused with several pieces of avionic equipment are examined here.

The shown antennas are used for:

- Radar - Radio detection and ranging. Shows the weather in ahead of the flightroute.
- Localizer - Receives lateral guidance forlanding.
- Glideslope - Receives vertical guidance forlanding.
- VHF - Very High Frequency communication within a range up to about 300NM.
- ATC - Air Traffic Control transponder. Receives and sends signals for air trafficsurveillance.
- DME - Distance Measuring Equipment. Detecting the distance to groundstations.
- TCAS - Traffic Collision Avoidance System. Alerts pilot if other aircraft arearound.
- Marker - Receives signal from a beacon at ground, for position determination during approach orenroute.
- GPS - Global Positioning System. Satellitenavigation
- ADF - Automatic direction finder. Navigation for short and mediumrange.
- Radio Altimeter- Detects the aircraft height above ground.
- SATCOM - Satellite Communication for voice anddata.
- ELT - E and rescuing the vict
- HF - Hi
- VOR - '

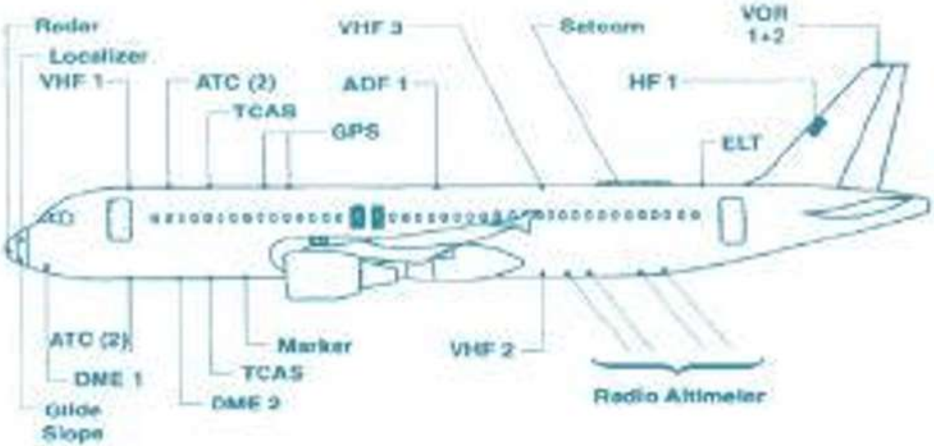

Fig. 2.17 Aircraft with Antennas Installation of aircraft antenna systems

There are a variety of radio antennas, each designed for aspecificradio and installation.Typicallythe radio antenna must be located on the exterior of the aircraft or located near theexteriorprotected by a plastic or nonconductive cover. Antennas which are mounted on theexterior of the aircraft are either the blade (rigid) or whip (flexible) type. Flush mounted antennasare located within the aircraft outer cover and produce less drag than an externallymountedantenna.

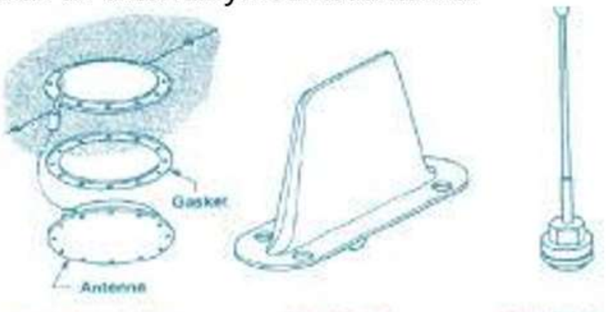

Flush Mount Type Blade Type Whip Type

Fig. 2.18 Antenna Types Maintenance procedures

Antennas and their associated cables should be visually inspected for security and integrity.The leading edge of blade- type antennas often deteriorate rapidly on high-speed aircraft. Thisareashould be given particular attention. If the antenna leading edge is deteriorated beyondlimits, the antenna should be removed and replaced. In some cases, the antenna may be repaired; however this typically requires a special repairfacility.

All antennas or antenna covers should be inspected for a proper seal (or gasket) to the aircraft.If the seal has deteriorated, moisture may enter the antenna or aircraft and create corrosionproblems. Remove and reseal any antenna or antenna cover which may admit moisture.Pressurizedaircraft also require that special attention be given to the antenna-to- aircraft seal inorderthat vapours do not leak form the pressurizedstructure.

Radar antennas are typically housed in the nose-section of the aircraft and are protected fromthe environment by a non- conductive cover called a radome. The radome should beinspected for cracks and to ensure a proper seal to the airframe. Proper

radomerepair is critical to theoperationof the radar equipment. Always follow the manufacturer'srecommendationsfor therepair and/or painting of theradome.

Static Dischargers

One major source of radio interference comes from the discharge of static electricity which isproducedon the aircraft due to friction. Whenever an aircraft travels through rain, dust or evenairborne pollutants, a static charge is produced on the skin of theaircraft.

Static dischargers help to eliminate radio interference by lowering the amount of static electricalcurrentwhich discharges from the aircraft back into the airIf the aircraft is equipped with static dischargers, the static discharge occurs at a lower currentlevel and much more frequently. The lower level of discharge current produces an extremelyweak magnetic field which is not picked up by radioreceivers. Static dischargers are mounted on the trailing edges and tips of wings, vertical and horizontalstabilizers, and control surfaces. The layout of static dischargers can be different, but work according to the same principle.

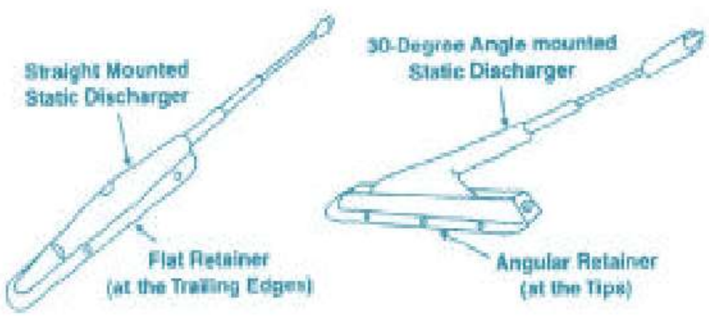

Fig. 2.19Static Dischargers

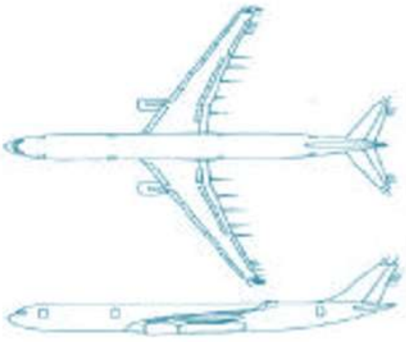

Fig. 2.20 Locations

Bonding

already stated in the introduction, the p-static problem can easily be solved by installingstatic dischargers. There are, however, some additional issues that require attention. First of allit must be assured that all moving airframe surfaces, detachable panels, etc. are bonded to themain mass of the airframe. This is done to prevent arcing which might create a fuel storageignition problem. It is also true that if moving parts of the aircraft, like flaps and ailerons, are notbonded together, then a difference in voltage level can exist between the two surfaces(distribution of the static charges through the bearings only is insufficient). As a result of thisdifferential potential, sparking can be induced across the unbonded portions of the aircraft. Wenow in effect have a spark transmitter that couples the energy of the spark into the aircraftantennas and can create crackling noises into the headphones. Similarly, inspection panels canbecome isolated from the main structure of the aircraft and have the sameresult.

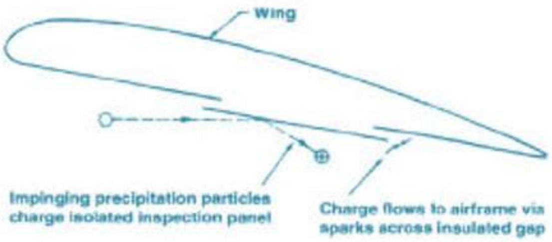

Fig. 2.21Charging due of incorrect bonding

VHF Communication

Introduction

The VHF is used for short range voice and data communications. The VHF system allows short distance voice communications between different aircraft (in flight or on ground) or between theaircraft and a ground station.

Frequency:	Very High Frequency,	118.000 – 136.975 MHz AM in 25 kHz channel spacing / 760 Channels
Power:	5-25 Watt	

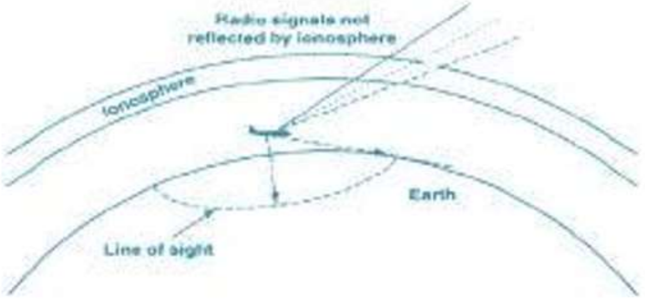

Fig. 2.22 Propagation VHF

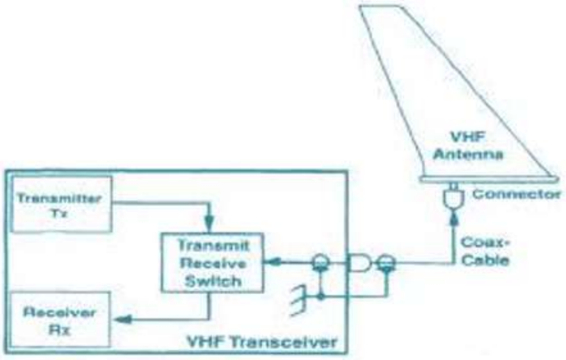

Fig. 2.23 Transceiver

Pressing the Push-To-Talk switch (PTT) located at the hand microphone, audio control panel,control wheel or side-stick changes from reception (Rx) mode to transmission (Tx) mode.

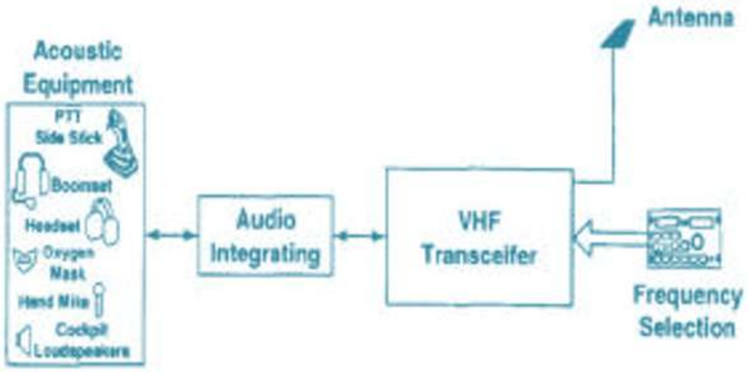

Fig. 2.24 System simplified Control

Tune the desired frequency

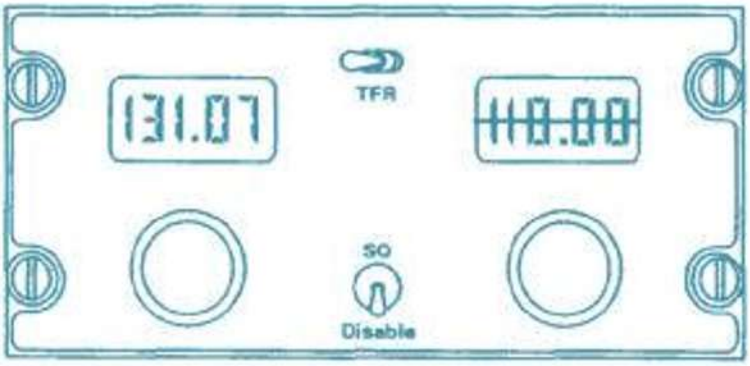

Fig. 2.25VHF COMM Control Panel

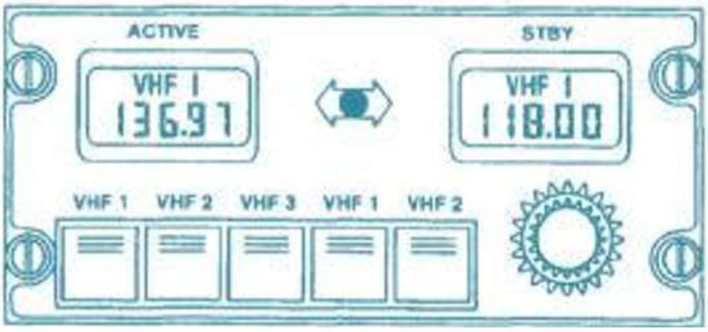

Fig. 2.26Radio Management Panel tunes 3 VHF and 2 HF Systems

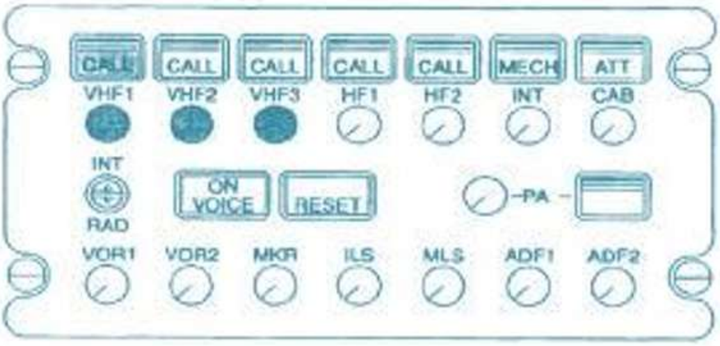

Fig. 2.27 Audio Control Pane

Receive:
Open the respective VHF potentiometer.

Transmit:
Press the desired Microphone (CALL) button and hold the RAD/INT switch in Radio position atACP or Control Column/Stick, or press the PTT button at hand microphone.

These frequencies are reserved:

118.00 MHz	Arrival
118.10 MHz	Tower
121.90 MHz	Ground
121.75 MHz	Apron
125.95 MHz	Departure
121.80 MHz	Delivery
121.50 MHz	**EMERGENCY**

HF Communication Introduction

The HF system allows long distance voice communications between different aircraft (in flight oron ground) or between the aircraft and a ground station.Frequency: Shortwave, 2 - 29.999 MHz AM in 1 kHz channel spacing/28,000Channels

Power:100 W- 400 W

The ionosphere reflects the radio waves back to the earth. This helps to reach any point of theWorld.

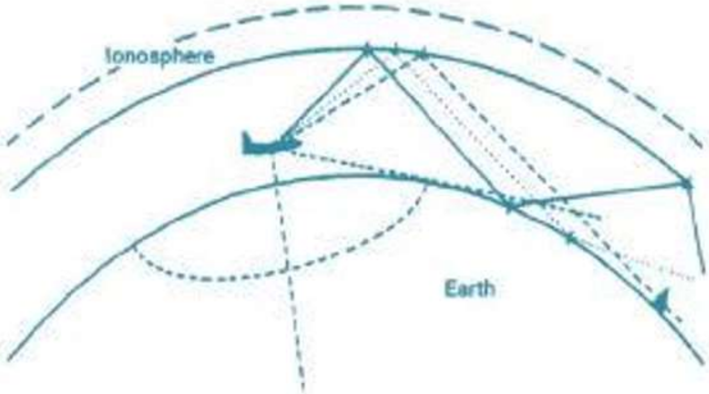

Fig. 2.28 Signal Radiation on Shortwave

The antenna must be matched to the transmission frequency. This is done with antenna-couplernear the antenna. Before transmission the antenna is automatically tuned within a fewseconds.

Pressing the Push-To-Talk switch (PTT) located at hand microphone, audio control panel,control wheel or side-stick changes from reception (Rx) mode to transmission (Tx) mode.

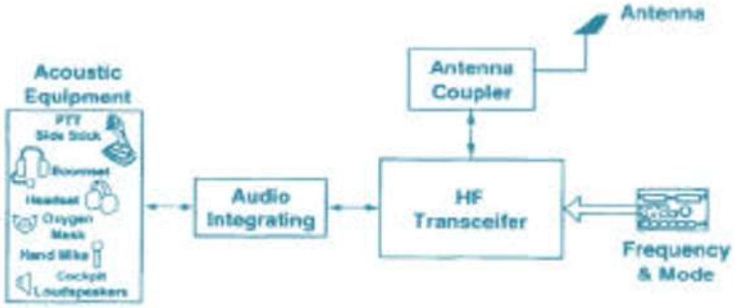

Fig. 2.29 HF - COM Block Diagram Simplified

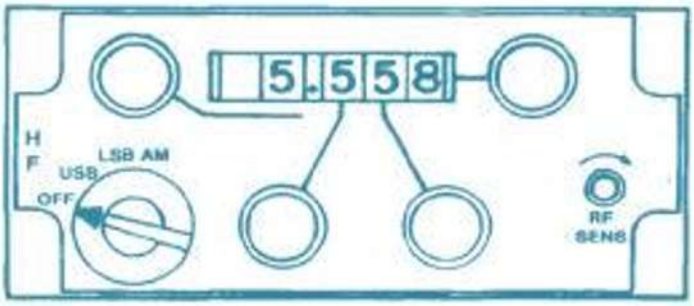

Fig. 2.30 HF Control Panel

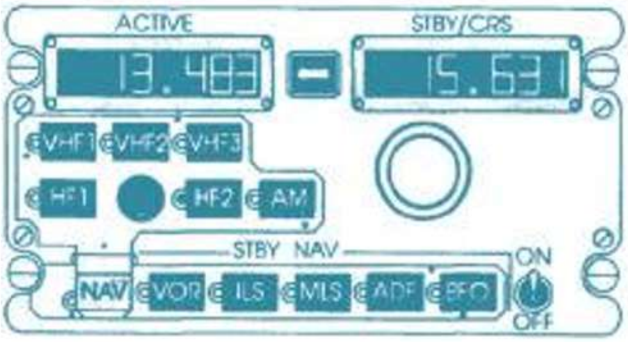

Fig. 2.31 Radio Management Panel

System

This is for communication between the aircraft and ground stations. The ionosphere reflects thefrequencies in the HF band, so the line of sight does not limit the reception range of the system.That is why the HF COMM is suitable for long range,worldwide communication.

The frequency range of the system is 2 to 29.999 MHz. You can make the frequency selectionin 1 kHz steps, so there are 28,000 channels available. There are two modes of operation, these modes are;

- AM - amplitudemodulation
- SSB - single sideband

In the AM mode the system transmits a carrier with amplitude modulation. In the SSB mode youremove the carrier and the lower side band. The system only transmits the USB.

The System has the following components;

- Atransceiver
- An antennacoupler
- Anantenna
- A controlpanel.

On the control panel you make the mode and frequency selections. The information goes fromthe control panel to the transceiver through an ARINC 429 data bus. The control panel alsoshows the frequency selection.

The received audio signals go from the transceiver directly to the audio management system. Adata output of the transceiver supplies the SELCAL decoder. The push to transmit (PTT) and microphonesignalsgodirectlyfromtheaudiomanagement system to the transceiver. The PTTsignals also go to the coupler. The antenna coupler adjusts the antenna impedance to get thecorrect load for the transmitter. To do a tune-cycle after a frequency change the coupler gets are-channel pulse from the transceiver. The transceiver gets a Tune-In-Progress (TIP) signalfrom the coupler. To monitor the coupler condition interlock signals go between the coupler andthetransceiver.

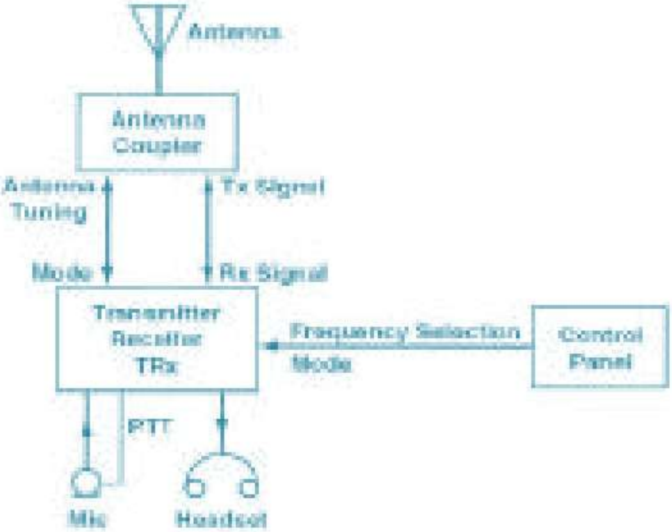

Fig. 2.32 HF System

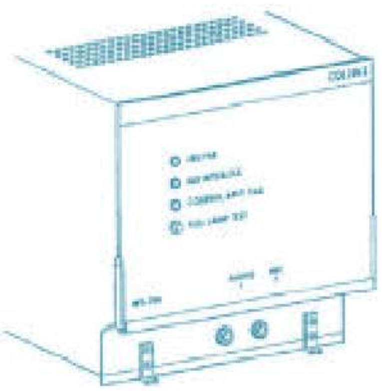

Fig. 2.33 HF Transceiver Unit

Antenna

Aircraft that fly over the water for long distances rely on high- frequency communications. Thelower frequencies used by this equipment require long antenna. The horizontally polarized radiation used by HF communications allows long wires to be used.

In the past, long-wire trailing antennas were used for HFcommunication. These are ofteninstalledbetween a point above the cockpit and the tip of the vertical fin. The wire is often acopper-plated steel wire, but the more efficient systems use an antenna wire encased in aplastic sheath to minimize precipitation static. Some modern high-speed aircraft have the HFcommunications antennas built into some part of the structure, such as the leading edge of theverticalfin.

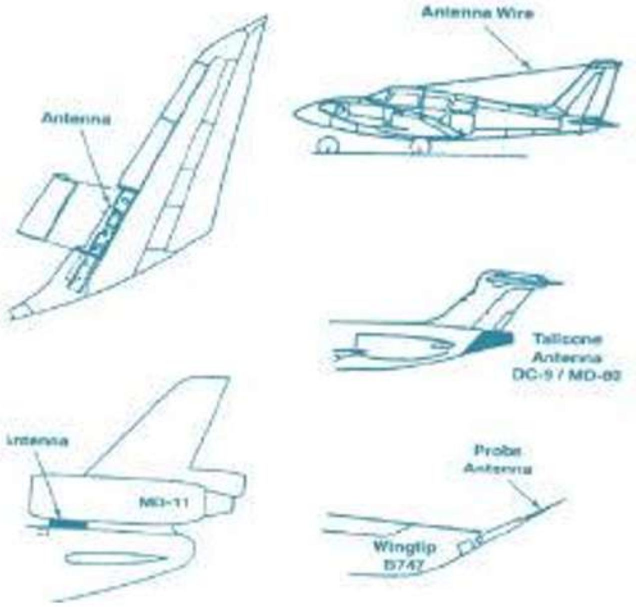

Fig. 2.34 Various HF Antenna Types

Selcal

The SELCAL (Selective Calling) system provides aural and visual indications of the callsreceivedfrom ground stations equipped with a coding device. The communication systemsused for SELCAL reception, are VHF and HF systems. The ground station transmits a selective call code, via VHF or HF transmitters. The SELCALcodepanel is used to provide the decoder with the SELCAL code dedicated to the aircraft. Thetransmitterand receiver must be tuned to the same operationalfrequency.

The SELCAL decoder compares the code selected on the

SELCAL code panel with thereceived code. Once detected, the information is sent to the aural warning, which generates a buzzer sound and the "CALL" legend flashes AMBER in the cockpit.

When the RESET key is pressed, the aural and visualindicationsarecancelled.

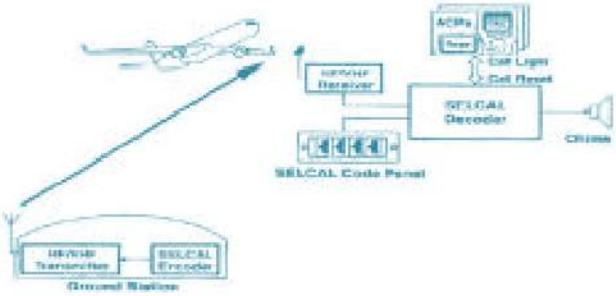

Fig. 2.35 SELCAL principle

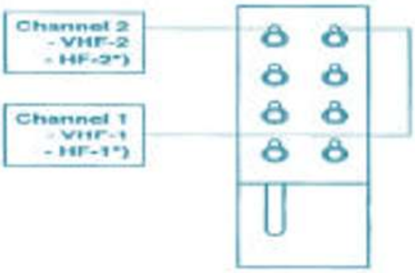

Fig. 2.36 Decoder

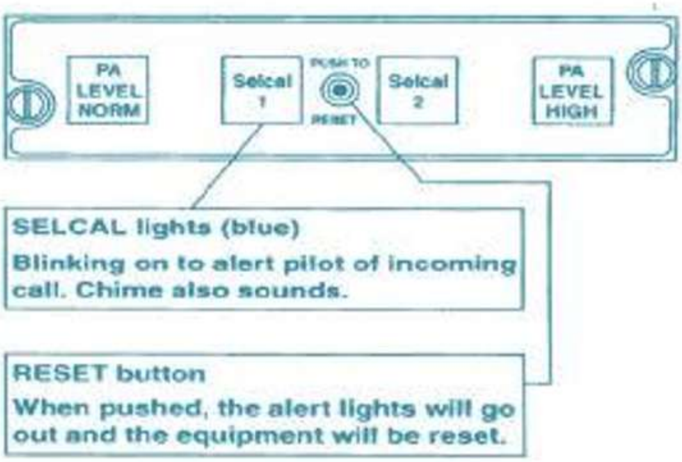

Fig. 2.37 Control Panel

Satellite Communication (SATCOM) Introduction

The Multichannel Aviation Satellite Communication System (MCS SATCOM) is a worldwidemobile communications system providing continuous voice and data communications servicesto and from the aircraft. In addition to the Airborne Avionics (referred to as an Aircraft EarthStation), the total MCS SATCOM system consists of the SpaceSegment (Satellite), GroundEarthStation (GES) and Public as well as Private Voice and Data terrestrialtelecommunicationsnetworks.

The Space Segment comprises satellites in geosynchronous orbit, providing air-ground packet-switched data services and voice communications using conventions and capabilities which arestandardizedWorldwide. The satellites function as communication transponders to support L-band links to and from the aircraft and provide links to and from Ground Earth Stations (GES).There are two space segment providers for Airline Aeronautical Satellite Communications. Thefirst is the International Maritime Satellite Organization (INMARSAT), whose system is in placetodayto provide worldwide coverage. The other is American Mobile Satellite Consortium (AMSC)system.

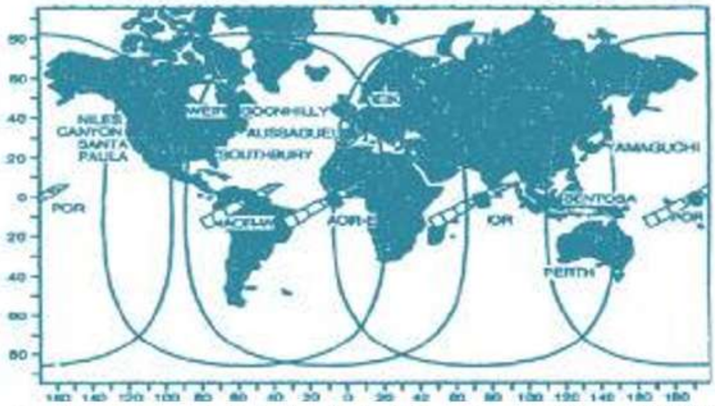

Fig. 2.38 Four Satellites and ten Ground Earth Stations

Aircraft Communication Addressing and Reporting System (ACARS)

The Aircraft Communication Addressing and Reporting System (ACARS) is an air – groundcommunication data link network that enables the aircraft to function as a mobile terminalassociated with modern airline command, control and management systems.

The ACARS is used to transmit or receive automatically or manually generated reports ormessages to or from a ground station. The ACARS is dedicated to maintenance, operation andcommercial purposes. The ACARS can manage both transmission and reception of data.Ground-to-air and air-to- ground digital messages are transmitted or received via VHF transceiver or the SATCOM system when the VHF link is not available.

The transmitted information is relayed via the ground stations to a central computer (SingaporeforSITA or Chicago for ARINC) where data is converted into airlinemessages.

A ground network (SITA for EUROPE, ARINC for the USA) transmits the data from the groundreceiver to the airline main base.

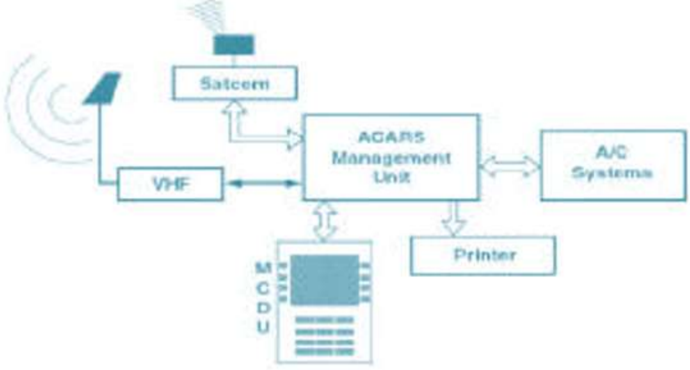

Fig. 2.39 ACARS aircraft system

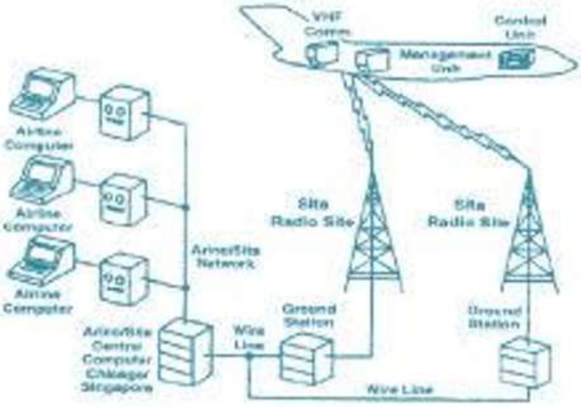

Fig. 2.40 Ground network with aircraft

ARINC (Aeronautical Radio Incorporated) operates ACARS. SITA (Societe International de Telecommunication Aerienne) operates AIRCOM.
Most parts of the World are covered by SITA-AIRCOM operated at 131.725 MHz.

- In USA is ARINC-ACARS is dominant at 131.550 MHz.
- Canada operates their own – AirCanadaat 131.475 MHz.
- Japan uses AVICOM at 131.450MHz.

If there is too much communication traffic at a certain frequency channel, the ground stationinitiatesan automatic frequency change to another channel. (RemoteTuning.)
At uncovered areas of the World, if there is no link to a ground station, the ACARS uses theSatellite Communication.

Audio Integrating

Modern airliners have a complex interphone system that allows flight crew members tocommunicate with each other and ground crew-members. The pilots and flight attendants can make announcements to the passengers, and the conversations in the cockpit are recorded forinvestigativeuse in the event of an air crash. Each of the subsystems of the Audio Integrating System of a large jet transport aircraft are consideredbelow.
All communications from the flight deck, both internal and external, are directed through audioselectionpanels at each one of the crew stations. By using switches on these panels, the crewmembers can receive and transmit on any of the VHF or HF transceivers, can listen to any ofthenavigation receivers, and can talk over the interphone or the public addresssystem.

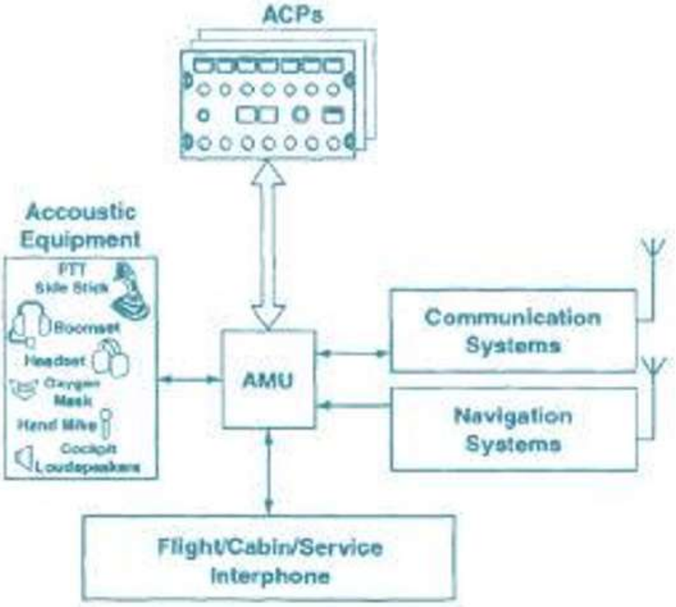

Fig. 2.41 Overview

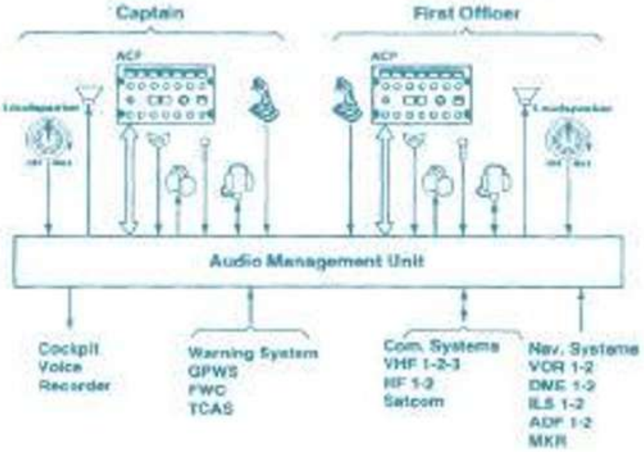

Fig. 2.42 Audio Integrating System

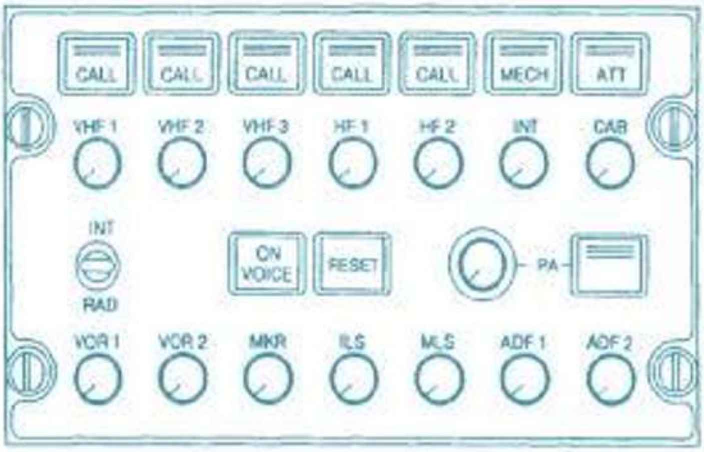

Fig. 2.43 Audio Control Panel ACP Acoustic Equipment

Headsets, boomsets, cockpit speakers, hand microphones and oxygen masks are used for thecommunication. Push-To-Talk

switches provide discrete signals to enable the transmission.

Microphone (Mike or Mic)

A microphone is a transducer that converts sound waves into electrical signals. For speech, itsfrequencyresponse should be as flat as possible from below 200 to above 3500 Hz. Most microphones pick up a lot of background ambient noises because the speech amplification. A“noise cancelling” microphone is recommended to reduce this background pick- up. Microphone output levels vary, depending on themicrophone type. Typical mics produce about 10 to 100 mV.

- Dynamic

A dynamic microphone resembles a small loudspeaker, with animpedanceof about 680 Q. and an output ofabout 12 mV on voice peaks. In manycases a preamplifier (possibly built-in) transforms the impedance to 100 k£2 or moreand delivers about 100 mV on voice peaks. Dynamic mics are widely used.

- Electret–

“Electret” mics use a piece of special insulator material that contains a“trapped” polarization charge (Q) at its surfaces and a capacitance (C). Soundwaves modulate the capacitance of the material and cause a voltage change. A polarizing voltage of about 4 V is required to maintain the charge. The mic outputlevelis fairly low, and a preamplifier is sometimesrequired.

- HandMicrophone

The handmic contains the preamplifier and the Push-To- Talk(PTT) switch. The DC power for the preamplifier is provided through the same lineas the output audio signal aircraft.

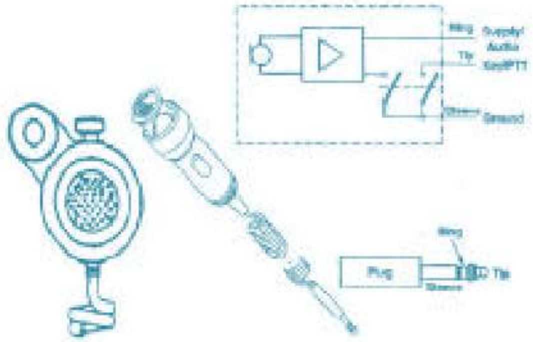

The Push-To-Talk (PTT) or Key signal is used to change from reception mode to transmit mode.

Fig. 2.44 Microphones Headset

The headset converts electrical energy into the motion of air molecules we call sound. Forreception and understanding of bad, distorted signals, it is better to use a headset instead of the loudspeaker.

Fig. 2.45 Headset

Boomset

The combination of a headset with a microphone is called boomset. The pilots or maintenancepersonnel do not need to hold the mic, so both hands are free towork.

Fig. 2.46Boomset

Oxygen Mask Microphone

If the crew wears oxygen masks, for communication it is important that a microphone changesthe voice into a signal to make spoken words in the mask understandable for radio or interphonecommunication.This microphone is active as soon the pilot has taken the mask from the stowagecontainer.

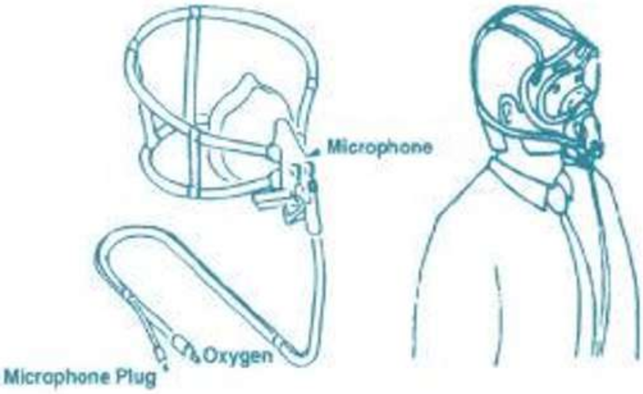

Fig. 2.47 Crew oxygen mask Cockpit Loudspeaker

If the incoming reception signal is clear and understandable the cockpit speaker is morecomfortable than the wearing of headsets. An amplifier increases the signal level to operate the speaker.

A volume potentiometer is used to select a convenient sound level.

The muting of speaker during radio transmission or interphone operation prevents acousticalfeedback (whistling noise).

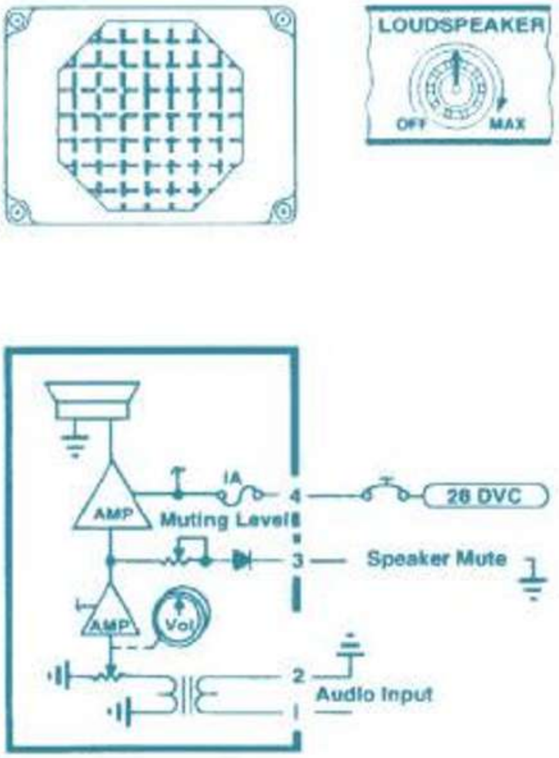

Fig. 2.48 Loudspeaker and associated circuit diagram Connections

The microphones and headsets are connected via jacks located in the cockpit, with the audiointegrating system. Built in preamplifiers gains the low output level of the dynamic microphonesto an appropriate level.

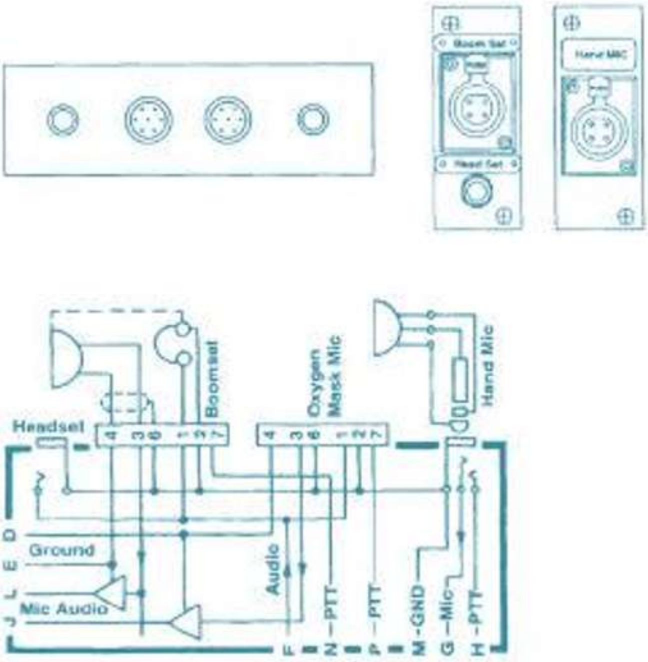

Fig. 2.49 Jack panel

Push-To-Talk Switches

To change transceivers from the reception mode to transmission mode, PTT or RADIO-INTERPHONE switches are used. Push- To-Talk switches for using hand microphones arelocated at the hand microphones. For the usage of boom or mask microphones, those switches are located at the steering wheel (yoke) or at the sidesticks in advanced technology aircraft.

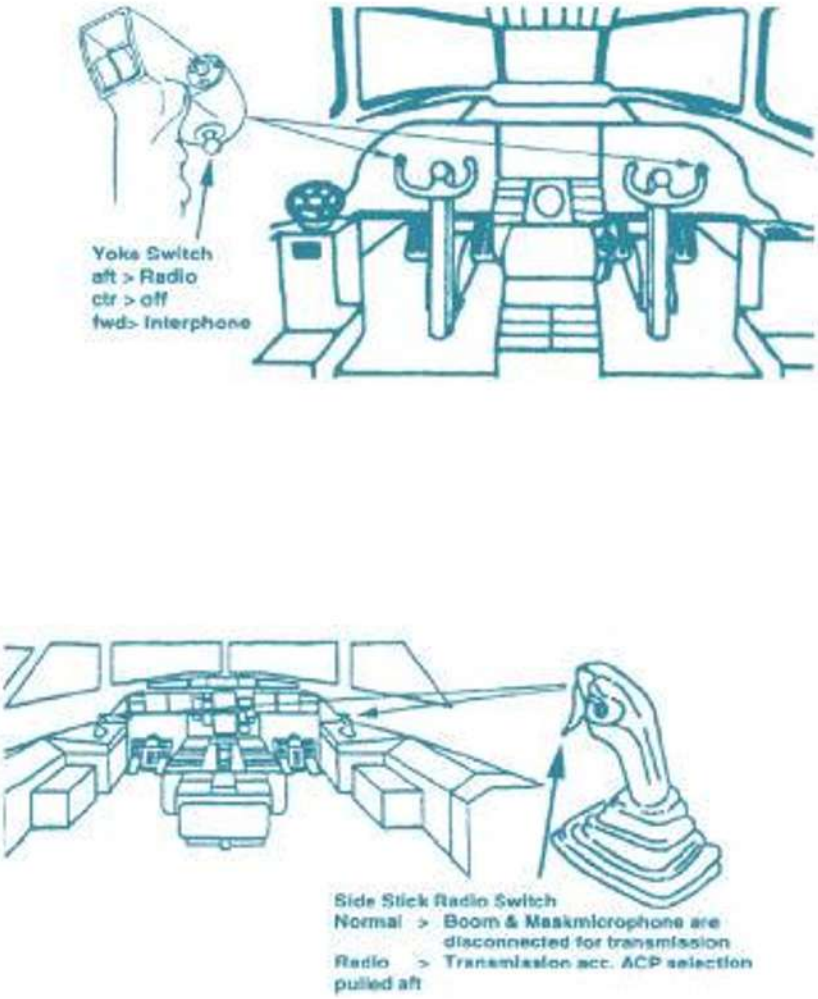

Fig. 2.50 Yoke switch and side stick switch

Cockpit Voice Recorder (CVR)

Introduction

The cockpit voice recorder must automatically begin recording before the aircraft first movesunder its own power and continue until it is no longer capable of moving under its own power. Inpracticalterms, this is usually from first engine start to last engineshut-down.

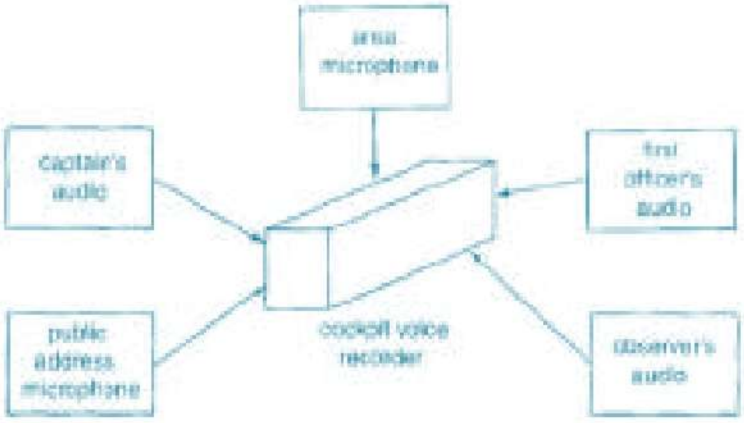

Fig. 2.51Cockpit voice recorder block diagram.

Figure 5.301 shows a block diagram of a cockpit voice recorder system for a large passengertransportaircraft.

There are four inputs to the recording heads: the microphones of the captain, the first officer,theobserver, and a microphone that picks up received audio and cockpit conversations. These microphones are always “hot” and do not require any type of keying. The pick-ups are all in thecockpit, but the actual tape recorder is in a fire resistant box usually located near the tail of theaircraft, and is painted bright orange so that it is easily identified among thewreckage.

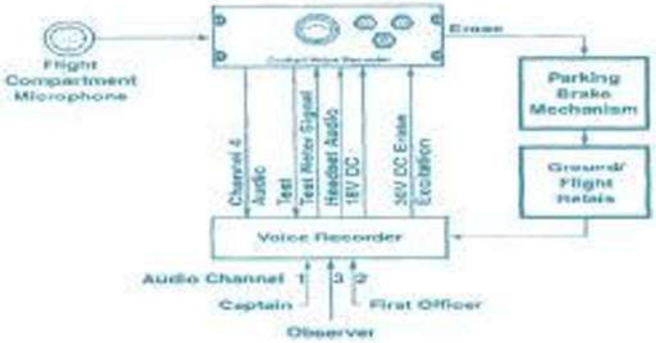

Fig. 2.52 CVR system block diagram

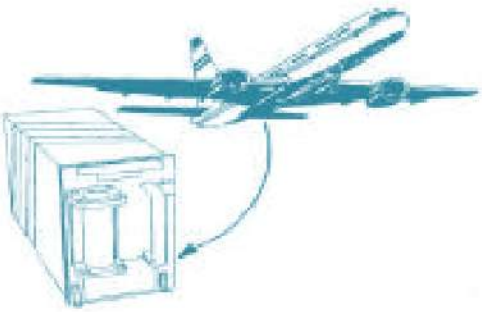

Fig. 2.53 Location in aircraft

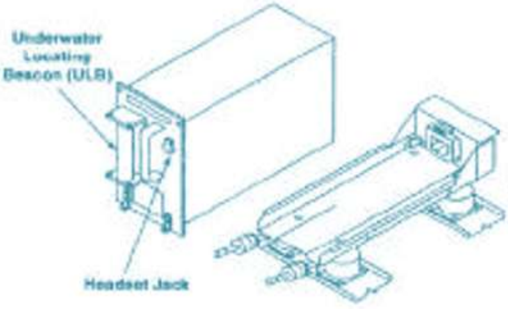

Fig. 2.54Recorder, shelf and ULB Function

The voice recorder system gets audio signals and records them on 5 separate tracks. On thetracks are the followingsignals:

- Channel 1: all selected audio from the captain’s audiostation
- Channel 2: all selected audio from the first officer’saudio station
- Channel 3: all selected audio from the observer’saudio station.
- Time reference signals from the flight data recordingsystem.

- Channel 4: all area-sound-signals from the flightcompartmentmicrophone.

The voice recorder control panel has the controls for a TEST andERASE function of therecorder. The erase function goes through interlock conditions. The control panel has straps for the setting of an internalamplifier.

The voice recorder gets the electrical power automatically when one of the engines is started(fuel levers open) or the aircraft is in flight. A time delay relay removes the power from the voice recorder 5 minutes after the aircraft is on the ground and all fuel levers areclosed.

Manually you apply power to the voice recorder with the CVR/FDR GND CONT push-switch onthe avionics switch panel. The automatic power switching overrides the manualswitching.

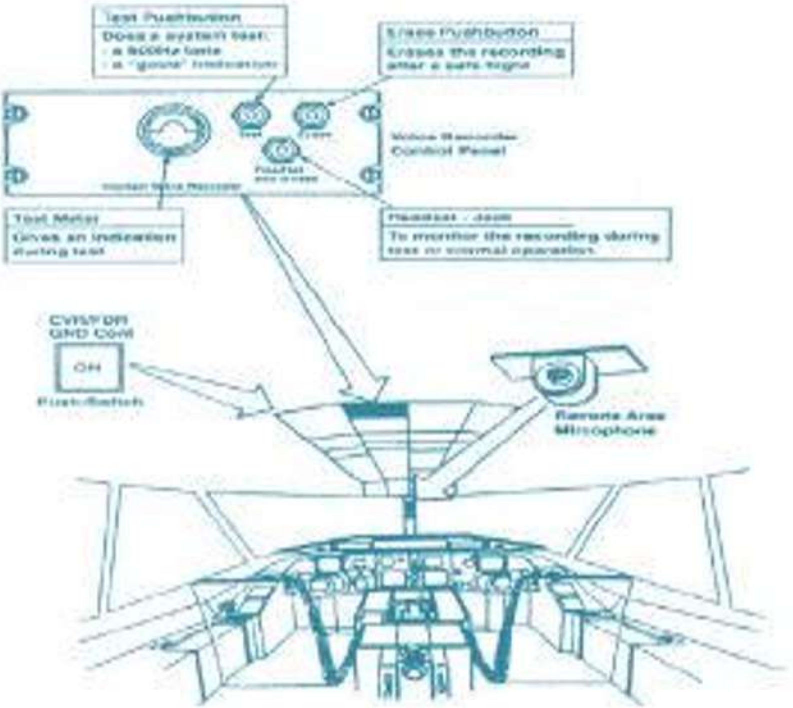

Fig. 2.55 CVR flight deck components

Emergency Locator Transmitter (ELT) General

Emergency locator transmitters help rescue crews find aircraft which have landed away from anairport. The latest transmitters send a radio signal to satellites, other aeroplanes, or air trafficcontrol facilities. Rescue crews use information from these sources to find theaeroplane.

Fig. 2.56 Typical ELT

Beacon Modes

The most important aspect of a beacon in classification is the mode of transmission. There aretwo valid transmission modes:

- Digital Mode - 406 MHzbeacons

- transmit a unique 15, 22, or 30 digitserial number called a Hex Code whichcontainsencoded data suchas:
- the Country of beaconregistration
- the identification of the vessel or aircraft in distress,and
- optionally, position data from onboard navigation equipment (GPS)transmits for a quarter of a second once every 50 seconds to both the GEOSARsatellitesandthe LEOSAR satellites406 beacons will be the only beacons compatible with the MEOSAR (DASS)system.
- 406 MHz beacons must be registered (seebelow).
- Analogue Mode - all otherbeacons
- A simple analogue siren tone is transmitted continuously until the battery dies,In the case of 121.5 MHz beacons, the frequency is monitored by mostcommercialairliners
- The Cospas-Sarsat system can only detect this typeof

beacon when a LEOSARsatelliteis in view of both the beacon and a LEOLUT (satellite dish). These beacons are being phased out (seebelow.)

Frequency

Distress beacons transmit distress signals on the following key frequencies; the frequency useddistinguishes the capabilities of the beacon. A recognized beacon can operate on one of the three (currently) Cospas-Sarsat satellite-compatiblefrequencies. In the past, other frequencieswerealso used as a part of the search and rescuesystem.

Cospas-Sarsat (satellite) compatible beacon frequencies

406 MHz UHF- carrier wave at 406.025 MHz + 0.005 MHz

Compatible until 1 February 2009: *

- 121.5 MHz VHF ± 6 kHz (frequency band protected to ±50 kHz)
- 243.0 MHz UHF + 12 kHz (frequency band protected to ± 100 kHz)
- NOTE: 121.5 MHz & 243 MHz beacons became satellite- incompatible on 1stFebruary2009.

ELT Locations

Aircraft Type ELT Location(s)

Boeing 737-400On bulkhead Fwd of Aft LH toilet Boeing 737-300/500 On bulkhead Fwd of Aft RH Door

Boeing 747-200In Overhead Ceiling Stowages at Doors I L & 5L Boeing 747-400 In Overhead Ceiling Stowage at Door 5L and on Aft Face of Bulkhead Fwdof Door IL

Boeing 757 On top of SEP Stowage Compartment Fwd of rear LHdoor

Boeing 767(S/H) Between Centre Att. Seats at Aft Galley Boeing 767(L/H) On Doghouse Stowages at Aft & Mid LHS Boeing 777In Overhead Ceiling Stowages at Doors 1 L & 4L

Airbus A320On front of Doghouse Stowage Fwd of Aft RH closet

The ELTs are attached by a Velcro Strap to a Mounting Bracket which is then bolted to theaircraft.

The ELTs comprise of the following:

- an antenna connected to the front panel and folded and retained through theFlotationCollar;
- aWaterSwitchconnectedtothefrontpanelandstowedin

a hole in the Flotation Collar;

- an On / Off/Arm baulked toggle switch on the frontpanel;
- an LED to indicate when the ELT istransmitting;
- a switch guard located through the ELI front panel slots to prevent operation of theSwitchto On whilst the ELI is stowed;
- a tether lead stowed in a hole in the FlotationCollar.

The Front Panel switch should normally be left in the ARM position whereupon the ELT willautomatically activate when the Water Switch comes into contact with water. Care should betaken to ensure that the Switch is NOT selected to the ON position at any time, except in anEmergencysituation. For those ELTs mounted within the Passenger Cabin where passengerscouldseethem,ascoverisshortlytobeintroduced to further deter any unauthorized tampering.

Inertial Navigation System (INS) Fundamentals

Inertia

In order to understand an inertial navigation system, both the definition of "inertia" and the basiclaws of motion as described by Newton over 300 years ago, is to be taken into account.

- Inertia can be defined as follows: "A body continues in a state of rest, or uniform motion in astraightline, unless acted upon by an external force." This is Newton's first law ofmotion.
- Newton's second law of motion states: "The accelerationof a body is directly proportional tothe sum of the forces acting on thebody."
- Newton's third law of motion states:"For every action, there is an equal and oppositereaction."

With these laws we can make a device which is able to detect minute changes in accelerationsandvelocity, an ability necessary in the development of an inertial system. Newton's second lawstatesthat the acceleration (that is rate of change of velocity) is directly proportional to the forceactingon the body. Velocity and distance are computed from sensed acceleration by theapplicationof basic calculus. Therelationshipbetween acceleration, velocity and displacement are shown overleaf.

Note that velocity changes whenever acceleration exists and remains constant whenacceleration is zero.

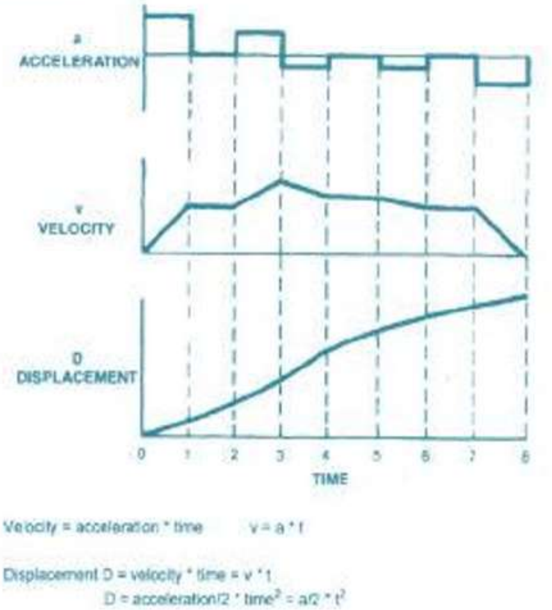

Fig. 2.57 Integration of acceleration

Accelerometers

The basic measuring instrument of the inertial navigation system is the accelerometer. Twoaccelerometersare mounted in the system. One will measure the aircraft's acceleration in theNorth-South directions, and the other will measure the aircraft's acceleration in the East-West directions. Theaccelerometeris basically a pendulous device. When the aircraft accelerates,the pendulum, due to inertia, swings off its null position. A signal pickoff device measures how farthependulumisoffthenullposition.Thesignalfromthe

pickoff device is sent to anamplifier, and current from the amplifier is sent back into the accelerometer

to the torquer motor.
The torquer motor will restore the pendulum back to its null position.

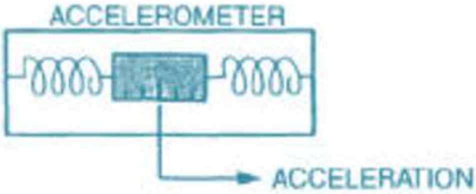

Fig. 2.58 Accelerometer Principle

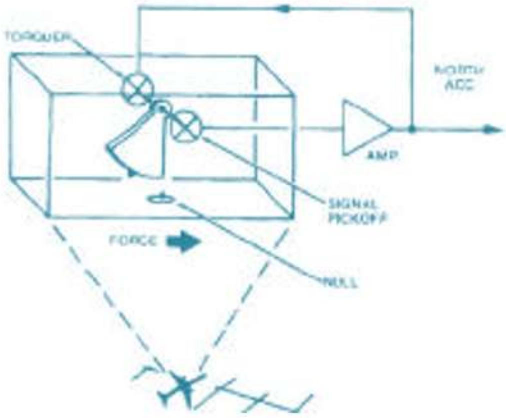

Accelerometer
Platform
X, Y and Z Axis

- X Axis NorthSouth
- Y Axis EastWest
- Z Axis UpDown

To navigate in a horizontal way, 2 perpendicular accelerometers are used. Theseaccelerometers are installed on a stabilised platform.

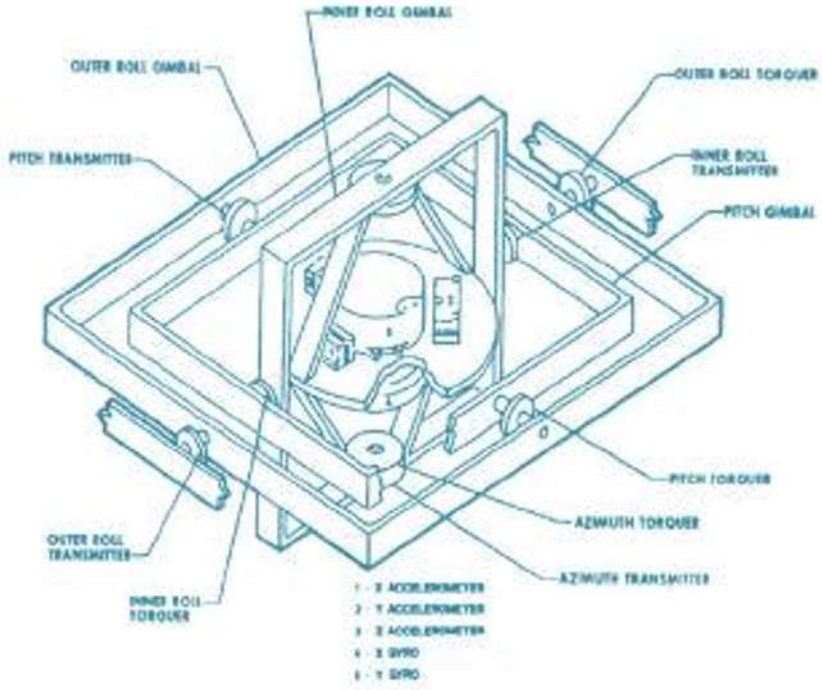

Fig. 2.59 Platform with 3 gyros and 2 accelerometers
Note: Z-gyro signal is taken from Y-gyro

Gyros

The gyro is used to control the level of the platform. The gyro and accelerometer are mounted on a common gimbal. When this gimbal tips off the level position, the spin axis of the gyro remains fixed. The case of the gyro moves with the gimbal, and the amount of movement is detected by the signal pickoff in the gyro. Here we have illustrated a single axis platform. In reality, movement can occur in three axes of the platform, pitch, roll, and yaw.

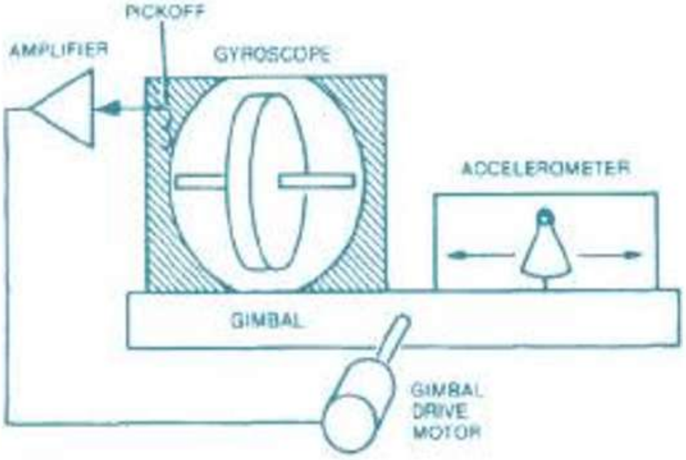

Fig. 2.60 Rate Integration Gyro Navigation by Inertial System

Navigation may be thought of as the means of finding the route from one location on the earth'ssurfaceto another. This is made possible by dividing the surface of the earth with a grid systemthat allows us to give an address to anylocation.

Longitude

The earth may be thought of as a sphere rotating in space about an imaginary axis that runsthroughits two geographic poles. This sphere is divided from north to south by lines that intersect at the poles and cut through the centreof theearth.

These lines are called meridiansof longitude and are measured from the prime meridian which passes through Greenwich, England. There are 360 meridians, labelled 1 to 179 East and 1 to 179 West. The primemeridian is zero degrees longitude, and the International dateline is the 180 degreemeridian. Meridians of longitude east of the prime meridian are called east longitude, and those to the west are westlongitude.

The meridians are not parallel, but each one of them is a part of a great circle, that is, a part of a line on the surface of the earth formed by a plane that passes through the centreof the earth.

Latitude

To form an intersecting line with the meridians, the earth is divided by parallel lines formed onthesurface by planes that cut the earth into parallel slices, each perpendicular to the axis ofrotation. The line that cuts the earth at its centre is called the equator and its latitude iszero.

The lines to the north are called parallels of northern latitude, with the North Pole located at 90degrees north latitude. Parallels to the south are called southern latitude, and the South Pole islocatedat 90 degrees south latitude. The parallels are, as their name implies, parallel to eachother, but the equator is the only parallel that is also a great circle.

All of our maps and charts are based on the grid system of latitude and longitude, with the geographic north and south poles being the references for this grid. The flight route from adeparture to a destination point is divided into several waypoints. These waypoints are definedby latitude (LAT) and longitude(LONG).

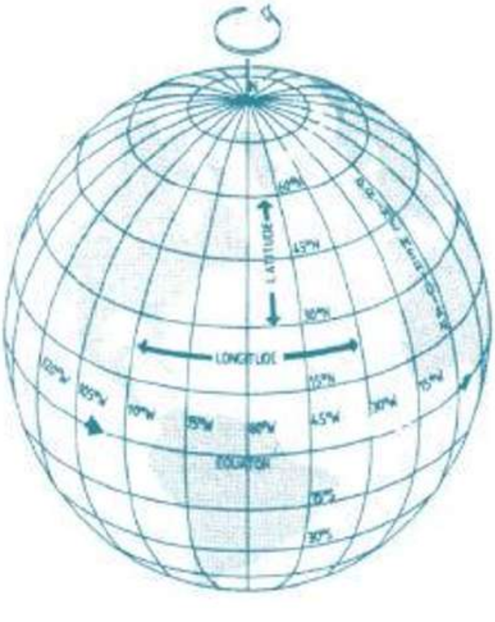

Fig. 2.61 Latitude and Longitude Parameters and Display

The navigation parameters are presented in digital form to theinertialsystem's Control DisplayUnits(CDU) or the aircraft’s Multifunction Control Display Units(MCDU).

Horizontal Situation Indicators (HSI) and Navigation Displays (ND) present the navigationparameters in analogue and digital format.

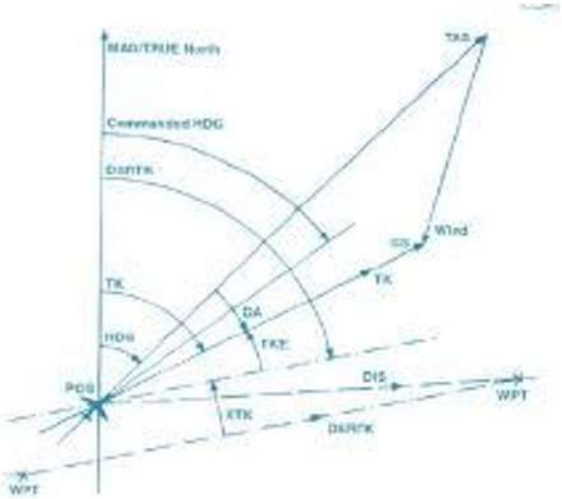

Fig. 2.62 Parameters measured and indicated

System Operation

The position information calculated by the INS equipment is typically displayed to the flight crewthrougha Horizontal Situation Indicator or EFIS. The flight crew typically controls the INS from acockpitdisplay called a Control Display Unit (CDU).

If the IRS is switched on, there is a need to insert the present position to align the system. Thealignment takes 10 minutes.

When aeroplane power fails, the IRU switches to batterypower. Aircraft batteries or separatebatteries provide the power for a maximum of 30minutes.

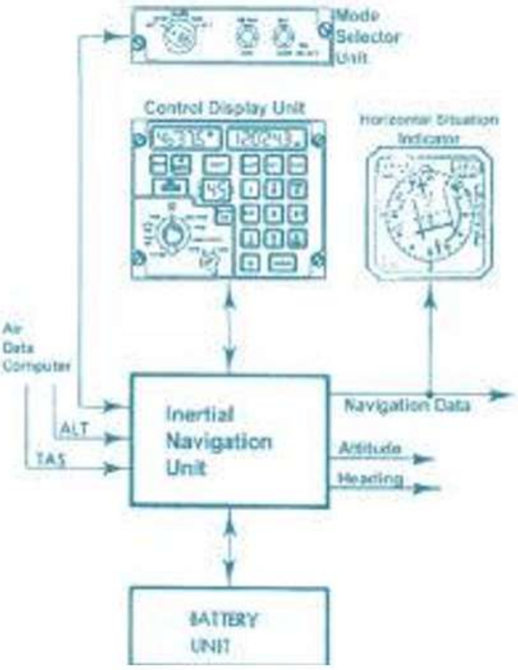

Fig. 2.63 Inertial Navigation System INS

All navigation functions are systemintegrated

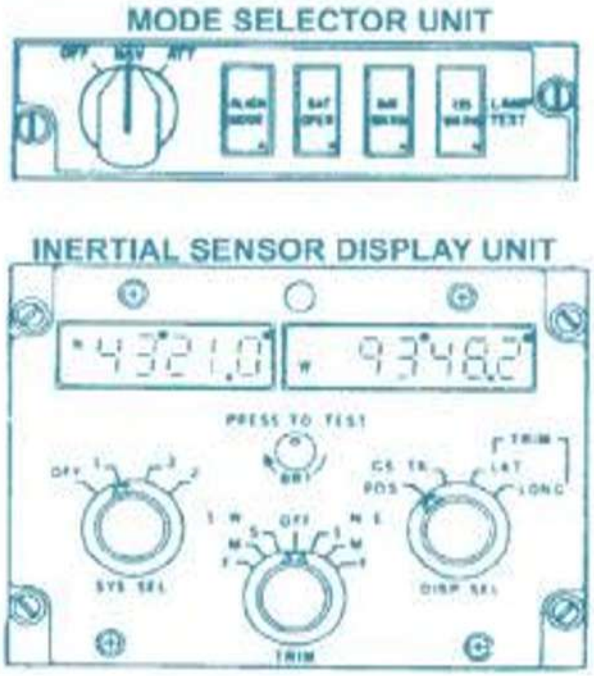

Fig. 2.64 Controls of Inertial SensorSystem

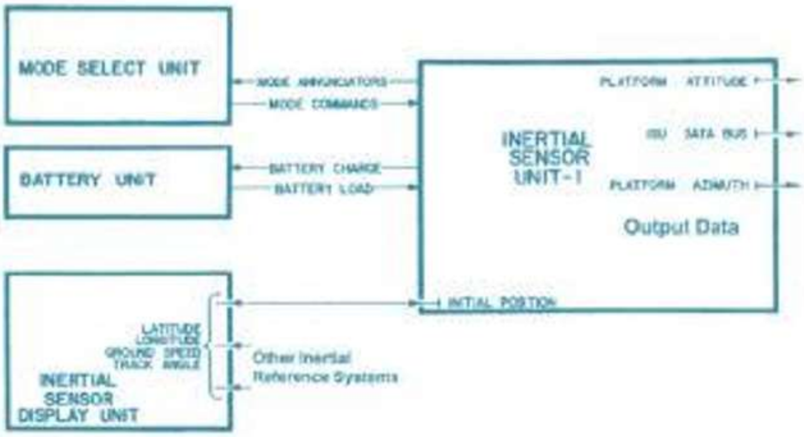

Fig. 2.65 Inertial Sensor System (ISS)

This system provides inertial parameter to other navigation devices (RNAV/FMS)

StrapdownSystem

In a strapdown inertial reference system, the gyros and accelerometers are mounted solidly tothe system chassis which is in turn mounted solidly to the aircraft. There are no gimbals to keepthe sensors level with the surface of the earth. The accelerometers are mounted such that theinput axis of one accelerometer is always in the longitudinal aircraft axis, one is in the lateralaxis, and one is in the vertical axis. Likewise, the gyros are mounted such that one gyro sensesroll, one senses pitch, and the other sensesyaw.

Ring Laser Gyro

Laser = Light Amplification by Stimulated Emission ofRadiation.

The laser gyro is a device that measures rotation by using the properties of two laser beamsrotating in opposite directions inside a cavity. The principles of operation of an ordinary singlebeam laser are described below, and then expanded into a description of the double-beam lasergyro.

In a laser cavity, photons are emitted (or light is radiated) in all directions. However, only thelightthat radiates in a straight line between two or more mirrors is reinforced by repeated tripsthrough the gain medium. This repeated amplification of the light reflecting between the mirrorssoon reaches saturation, and a steady-state oscillation results. This light oscillating between themirrorsis typically called a laser beam. To obtain useful laser light outside the laser cavity, asmallpercentage of the laser beam is allowed to pass through one ofthe mirrors.

Lasergyrosaresensorsofangularrateofrotationaboutasingle axis. They are made of atriangularblock of temperature-stable glass. Very small tunnels are precisely drilled parallel to the perimeter of the triangle, and reflecting mirrors are placed in each corner. A small charge ofhelium-neon gas is inserted and sealed into an aperture in the glass at the base of the triangle.

When high voltage is run between the anode and cathode the gas is ionized, and in the energyexchange process many of the atoms of the gas are transformed into light in the orange-pink part of the visiblespectrum.

In a laser gyro, two beams of light are generated, each travelling around the cavity (in this caseatriangle) in opposite directions.

The laser beams have coherent wave-like properties. The light is a pure frequency. The helium-neon laser gyro, is defined by its wavelength (the reciprocal of frequency), it is 6,328 Angstroms.

Although the frequency is determined by the gas that is in it, it can be varied somewhat bychanging the path length over which the waves have to travel. For a given path length there arean integral number of waves. If the path length is altered, the waves will be either compressedor expanded, but there will always be an integral number of cycles that occur over the completepath. If the waves are compressed, more cycles occur per unit time. Hence, the frequencyincreases. If expanded, the opposite istrue.

Since both contra-rotating beams travel at the same constant speed of light, it takes each thesame exact time to complete its circuit. However, if the gyro were rotated on its axis, the path length of one beam would be shortened, while that for the other would be lengthened. Since, asexplained, the laser beam adjusts its wavelength for the length of the path, the beam that travelled the shorter distance would rise in frequency (wavelength decreases), while the beamthat travelled the longer distancetocompletethecircuitwouldencounterafrequency decrease.

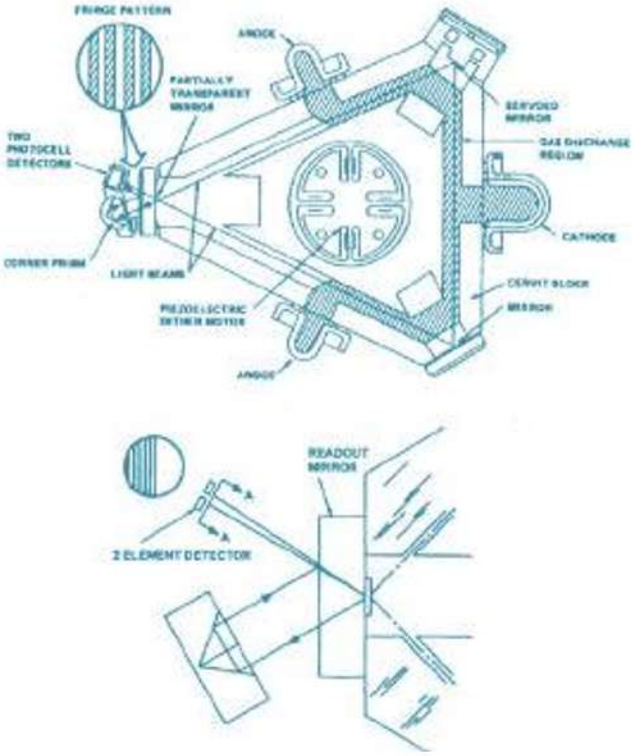

Fig. 2.66 RLG

Automatic Direction Finder (ADF) Principle

The ADF is an historic short and medium range radio navigation aid, which receives andinterpretsthe signals provided by non directionalbeacons (NDB)and broadcastingground stations.

The combination of signals, received from two loop antennae and from one omnidirectionalsenseantenna, provides bearing information. The two loop antennae are positioned 90°apart on the aircraft structure. The signal from the omnidirectional sense antenna is not affected bythe relativebearing.

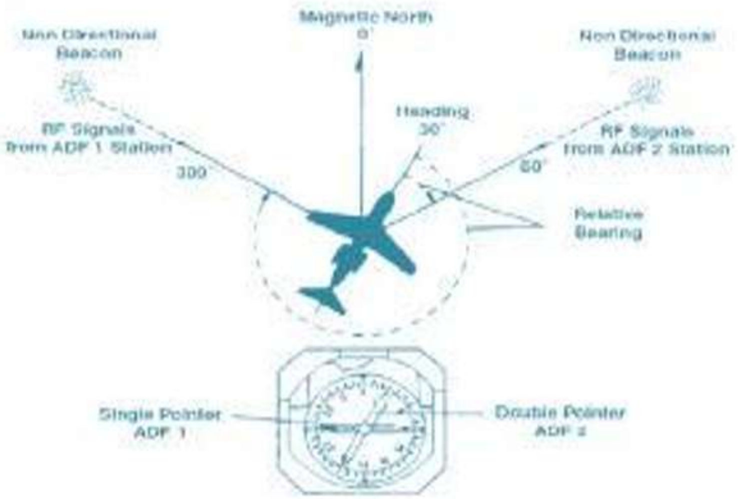

Fig. 2.67 Bearing Indication

Control:

- Frequency selection: low and medium frequency (LFand MF)190-1750KHZ
- A1 NormSwitch

A1: Reception of non-modulation morse code (Continuous wave -CW)
Normal: Reception of normally modulation NDBS and broadcasting stations.

- ADF-ANTSwitch

ADF: Reception with loop and sense antennae. (Direction finding)

ANT: Reception with sense antenna only. (Listening to broadcast)

- TFRSwitch

Transfers the receiver tuning to the standby frequency

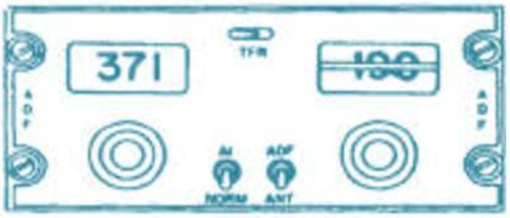

Fig. 2.68ADF Control Panel

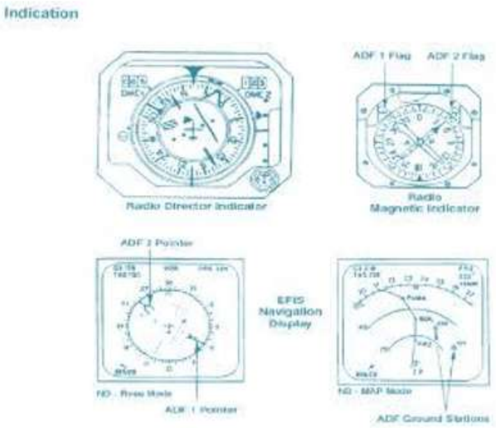

Fig. 2.69 Various ADF Bearing indications

Loop antenna in position:
A Output voltage is minimal B Output voltage is maximal

C Output voltage is Umaximaix sin a
According to the phase angle between loop and sense-signal, the automatic direction findingcircuit steers the loop-antenna to the correct null position

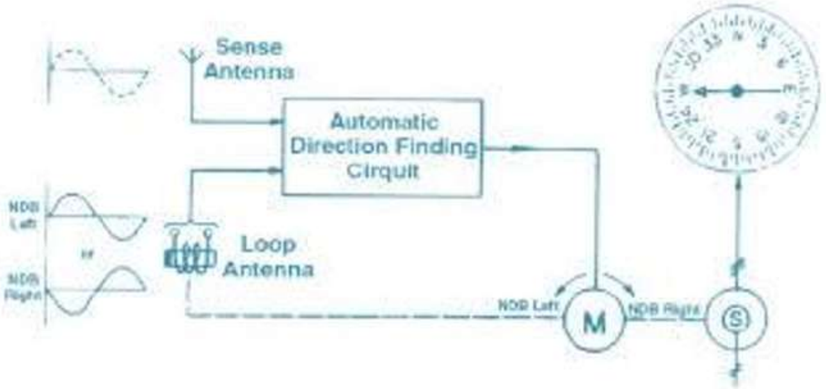

Fig. 2.70 Principle of Direction Finding

Bearing Indication

Relative Bearing Indicator (RBI)
This is the oldest type of indication. The heading scale is fixed and not rotatable. The arrowheadof the pointer indicates toward an NDB. The angle between the aircraft longitudinal axis and a tuned radio station is called "relative bearing".
The "absolute bearing" from the aircraft position toward a NDB
(Named QDM) must becalculated by the pilot.

Radio Magnetic Indicator (RMI)
The heading dial rotates automatically with the compass system. At the heading reference line,(also knownas lubber line) the actual magnetic heading is shown. The pointers are showing the direction from the aircraft position toward the tuned NDB - called QDM (Direction Magnetic),also defined as "absolute bearing".
The single or red pointer shows the bearing of the ADF 1.

The double or green pointer shows the bearing from the ADF 2. Refer to Figure 5.459.
Relative Bearing

- Pointer 1 shows 90° (3hposition)
- Pointer 2 shows 0° (12h position) AbsoluteBearing
- Pointer 1 shows QDM 45° (3hposition)
- Pointer 2 shows QDM 315°(12hposition)

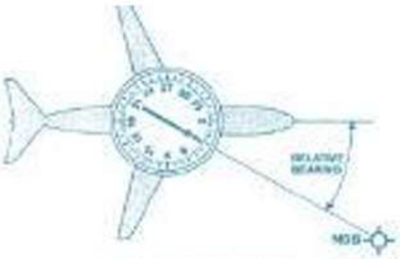

Figure 5.45h Relative Bearing

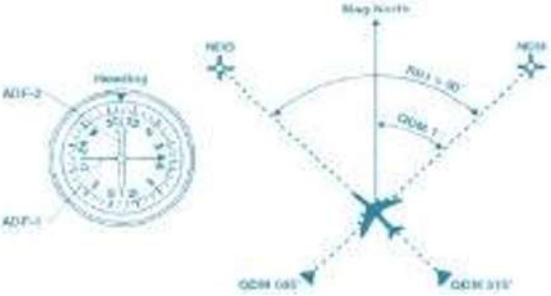

Fig 2.71 Absolute Bearing

VHF Navigation General

The VHF Navigation contains following subsystems

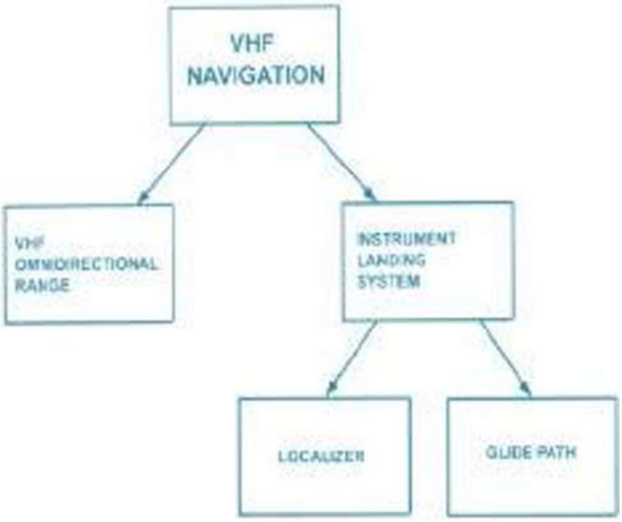

Fig. 2.72 VHF Navigation General

The landing chart demonstrates the usage of ILS. The chart at next page shows different VOR station aroundZurich.

Instrument Landing System (ILS) General

The Instrument Landing System allows the aircraft to follow an optimum descent. The descentaxisis determined by the intersection of a localizer beam and a glideslope beam. The beamsare created by ground stations. The ILS allowsmeasurement and display of angular deviationsfromthose beams. The ILS also detects Morse audio signal which identifies the ILSgroundstation.

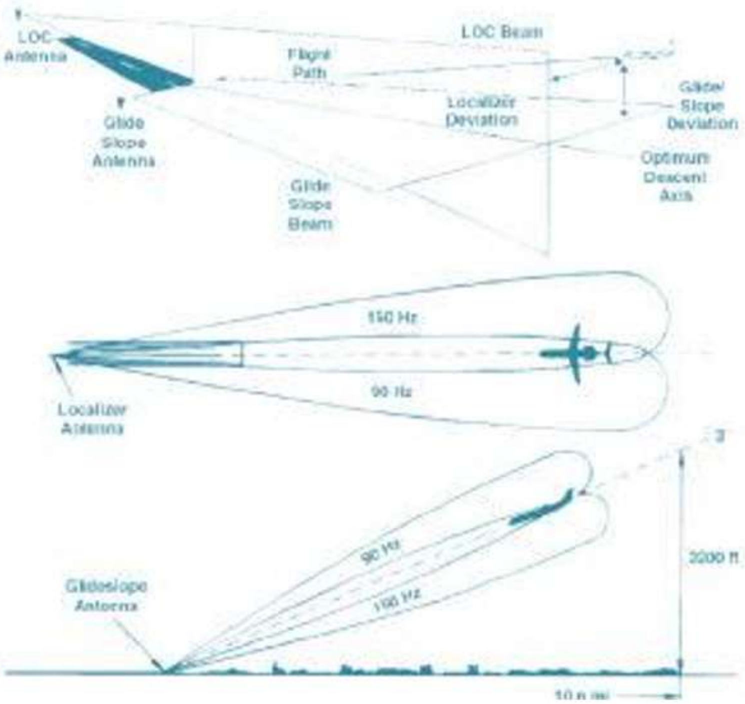

Fig. 2.73 Runway with Localizer and Glideslope Frequency:

Localizer 108.10 -111. 95 MHz all odd 1/10 MHz steps / 40 Channels
(Even 1/10 MHz steps arereserved for VOR)
Glide Path reception is about 330 MHz paired with Localizer channels

Tuning

The operator has to tune the ILS via control panel or MCDU. In automated flight decks the FlightManagementSystem executes an automated tuning before the beginning ofthe approach.

Localizer and Glidepath Frequencies

Each glideslope channel is paired with a specific localizer frequency and is automaticallyselected when the pilot tunes the VHF nav receiver to the localizer frequency.

This Radio Management Panel can be used to tune the following systems:

- VHF communicationtransceiver
- HF communication transceiver with SSB/AMselect

Backup tuning for:
- VOR Receiver, frequency andcourse
- ILS Receiver, frequency and runwayheading
- ADF Receiver, frequency and BFOon/off

Localizer Ground Facility

The localizer signal comes from a transmitter located at the end of the runway that operates inthe frequency range from 108.10 - 111.95 MHz. The localizer transmits two beams; one on the right side of the runway centreline and one on the left side of the runwaycentreline.
The beam on the right side has a 150 Hz modulation; the beam on the left side has a 90 Hzmodulation. When the aircraft flies over the extended centreline to the runway it receives bothsignals with an equal strength. When the aircraft deviates from the centreline there is adifference in signal strength

(Difference in Depth of Modulation - DDM). The system measuresthe deviation from the centreline by comparing the strength of these 90 Hz and 150 Hz

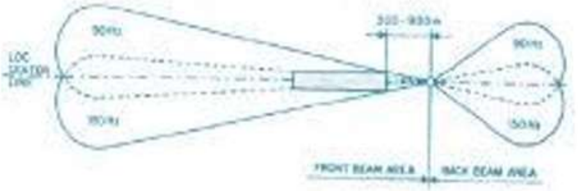

Figure 5-167. Antenna Pattern

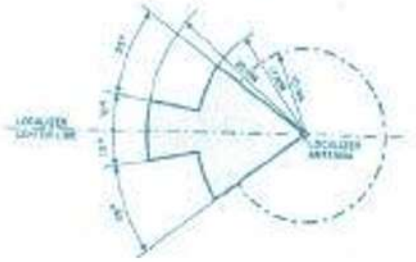

Fig. 274. Range

LOCReceiver

When the VHF Nav receiver is tuned to a localizer frequency, the localizer circuitry is activated.The signal from the antenna is taken into the receiver and passed through two filters. One filter passes the 90 Hz tone and the other passes the 150 Hz tone. This audio signal is rectified andchanged to a DC voltage applied to the amplitude comparator that drives the pointer of the Left- Rightindicator.
The summing network verifies the correct reception of both signals.A spoken weather and runway information - Automated Terminal Information System (ATIS)and/or 1020 Hz Morse code identification is routed through the voice filter to the cockpit speakerorheadphones.
Glide Slope or Path (GS orGP)

Ground Facility
The glideslope signal comes from a transmitter at the beginning of the runway that operates inthe frequency range from 329.15 MHz to 335MHz.
The glideslope transmits two beams to give vertical guidance over theglidepath.
The glidepathhas an angle of approximately 3°. The glideslope be ams are just like the localizer; modulatedwith 90 Hz and 150 Hz. The 90 Hz modulated beam is above and the 150 Hz modulated beamis below the 3°glidepath.
The system measures the deviation from the difference in signal strength between the 90 Hz and 150 Hz modulation signals. The navigation display showslocalizer and glideslope deviation. The glideslope transmitter and antenna are located about 750 to 1,250 feet from the approachend of the runway and offsetabout
250 to 600 feet from the runway centreline. It transmits a highly directional signal that is approximately 1.4°wide and is angled upward from thetransmitter at an angle of approximately 3°The signal from the glideslope is transmitted on one of 40 VHF channels between 329.15MHz and 335.00MHz, and the antenna is a small VHF dipole that is sometimes built into the front ofthe VOR/localizerantenna.

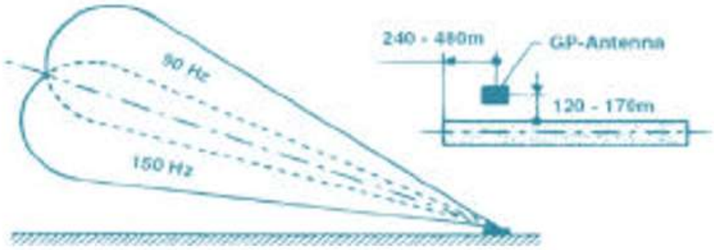

Fig. 2.75Glide Path Antenna Pattern

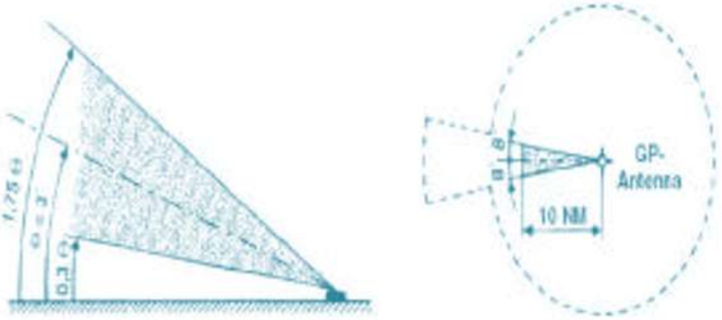

Fig. 2.76 Range of Glide Path

GS Receiver

Two signals, using the same carrier, are transmitted from the antenna system in such a waythatthey overlap to form the glideslope. The upper signal is modulated with a 90 Hz tone andthelower signal is modulated with a 150 Hztone.

When the signal is received, the audio modulations are filtered and converted into DC voltagesthat drive the deviation pointer.

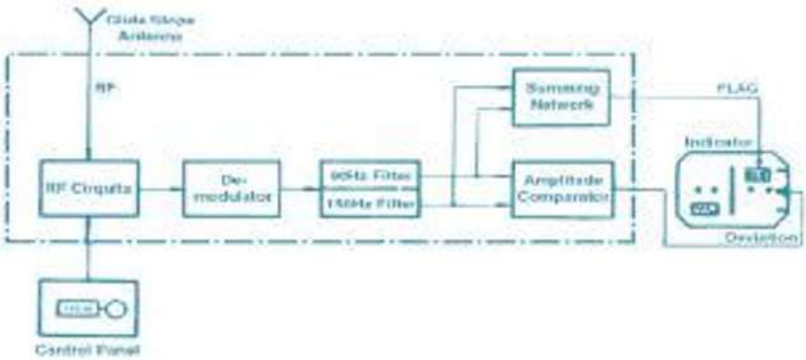

Fig. 2.77 GS Receiver

VHF Omnidirectional Range (VOR)

Introduction

The Very High Frequency Omnidirectional Range system is a navigation aid which receives,decodes and processes bearing information from the omnidirectional ground station.
The phase difference between the reference and the variable phase is function of the aircraftposition which respect to the ground station.

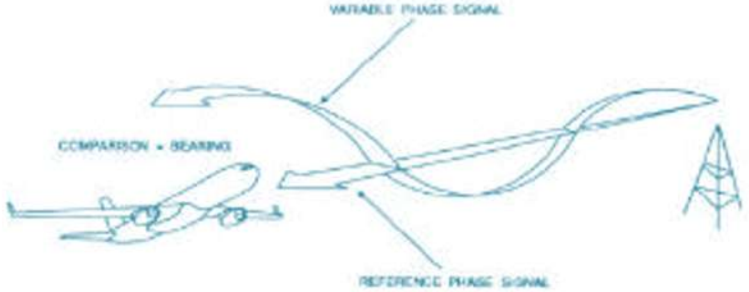

Fig. 2.78 VOR Signal

The VOR system provides:

- Bearing information from the difference between two phases transmitted by a groundstation.
- Aircraft angular position with respect to a selected course.
- TO/FROM position with respect to a selectedcourse.
- A Morse signal which identifies the station. The frequency range is: 108.00 -117.95MHz

The VOR system is a medium range radio navigationaid.

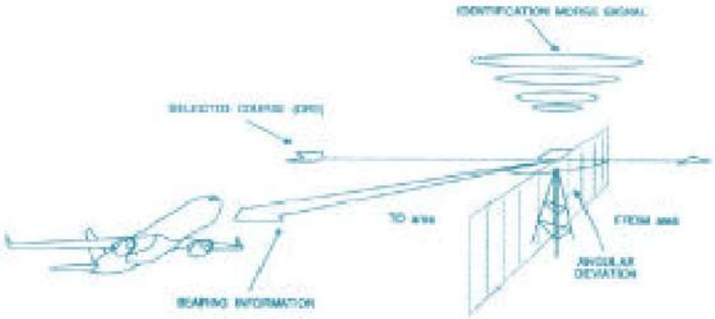

Fig. 2.79 VOR Information VOR Information

Radio Magnetic Indicator

This instrument is a compass repeater, fitted with two VOR pointers, one for each VOR systeminstalled. When the frequency of a VOR station is tuned and valid signals are received, therespectivepointer will automatically point in the direction of the selected VOR station,showingQDM.

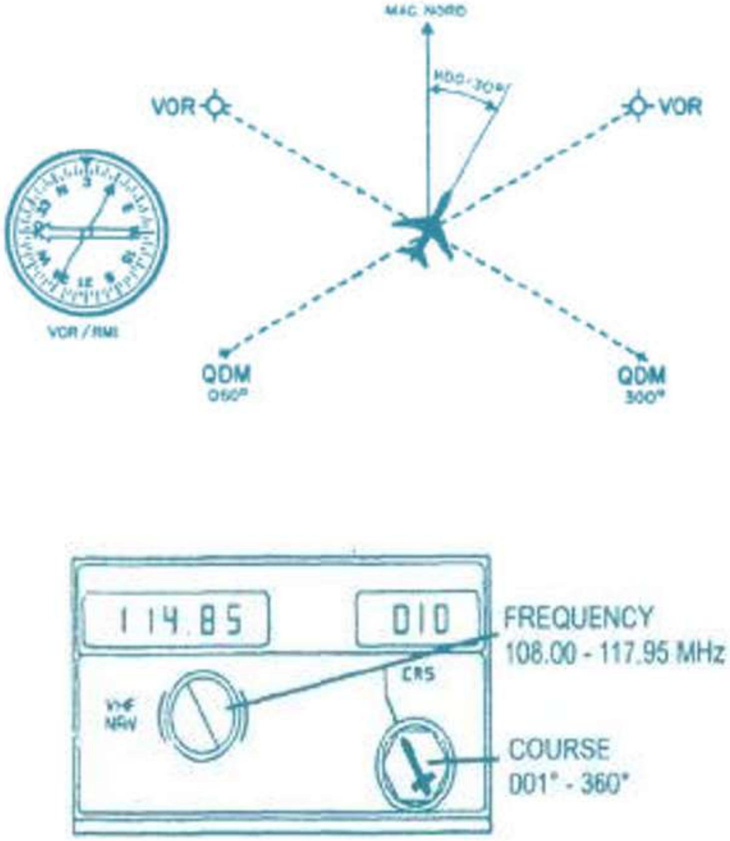

Fig. 2.80 RMI

1. Information of selected VORstation Selected frequency, course and station identification.
2. VOR BearingPointer Magnetic bearing (QDM) toward selected VOR station.
3. VOR Course Pointer Represents selected VORcourse.
4. DeviationBar

Eeach dot represents a lateral deviation of 5°again stthe selectedcourse.

5. TO/FROMIndication

The arrow shows “to” (QDM) or “from” (QDR) the VOR station

Marker Beacon Fundamentals

The Marker system is a radio navigation aid which determines the distance between the aircraftand the runway threshold. When the aircraft over-flies one of these Marker transmitters, thesystemprovides aural and visual indications to the flight crew.

Frequency: 75 MHz

Beacons

Marker radio beacons are transmitters whose antenna systems are designed to propagatevertical beams.

Two types of Markers are used, the Z and theFan-Marker.

The Z-Marker, whose vertical beam is cone shaped, is used to mark a certain crossing point ofairways, or to fill the cone of silence over an NDB.

The Fan-Marker propagates a fan shaped beam and is used to mark important positions alongairwaysand to give distance to threshold information on the approach and landing path.

According to ICAO recommendations, Airway Markers should reach at least 20,000 ft and ILSMarkers 6,000 ft in altitude.

Frequency and Emissions

All markers work on 75 MHz with modulation. They are modulated with either one of 3 audiofrequencies according to their implementation. The audio frequency can be audio keyed foridentificationpurposes.

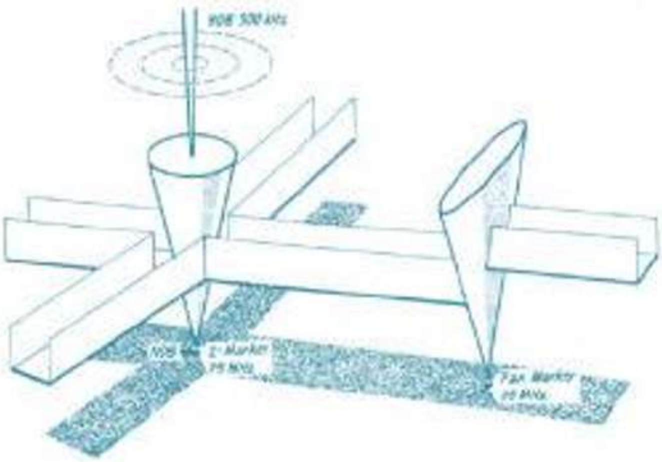

Fig. 2.81 AirwayMarker

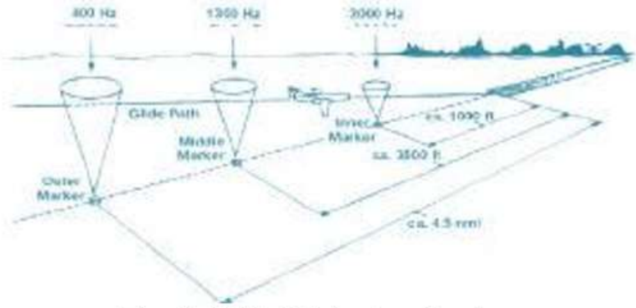

Fig. 2.82 ILS Marker System

A 75 MHz VHF receiver and a display unit in form of 1 or 3 lamps (one for each or one for allpossible modulation frequency) arerequired.

The output of the Marker receiver is provided to the headphones or loudspeakers and to thevisualindicating system: lights or Primary FlightDisplay.

When the aircraft over-flies a Marker beacon, the pilot hears the audio signal and sees theappropriateMarker visual indication.

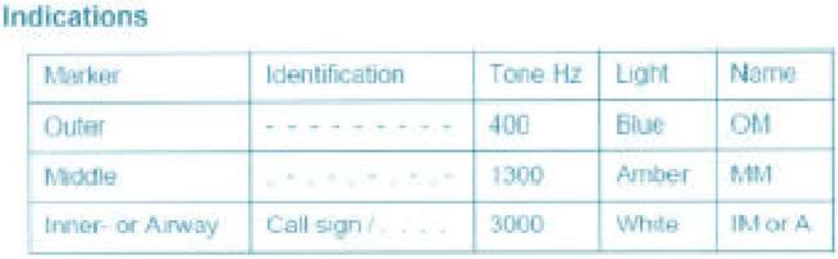

Indications

Marker	Identification	Tone Hz	Light	Name
Outer	- - - - - - - - - -	400	Blue	OM
Middle	. - . - . - . - . -	1300	Amber	MM
Inner- or Airway	Call sign /	3000	White	IM or A

Table 2.2 Marker beacon features

Receiver

The marker beacon receiver detects the audio modulation of the 75 MHz input. The audiomodulationof 400 Hz or 1300 Hz or 3000 Hz goes to the audio filters. If a marker beacon audiotoneis present, it goes through the filter and closes the electronic switch to give a ground for aMarkerlight.TheMarker receiver can also be built inside the VOR or ILS receiver.

To provide the display at the EFIS, this information also goes to the multiplexer and ARINC 429transmitter in the VOR/MB receiver. The ARINC 429 transmitter puts the marker beacon information in the bits 11 , 12 and 13 of label222.

Distance Measurement Equipment (DME) Principle

The Distance Measuring Equipment (DME) provides a digital read-out of the aircraft slant rangedistancefrom a selected ground station. The system generates interrogation pulses from anonboardinterrogator and sends them to a selected ground station. The ground station replies.Theinterrogator determines the distance in Nautical Mile (NM) between the station and the aircraft. The interrogator detects the Morse audio signal which identifies the groundstation.

Frequency: Around 1 GHz (UHF range), 252 channels paired with VHF NAVfrequencies.

At the same location as a VHF omnirange station (VOR) is generally also a DME station. TheVOR gives bearing and the DME distance to that station.

DME ground stations located close to ILS - runways are used to determine the distancebetween approaching aircraft to the runway threshold. To compute the distance betweenrunway- threshold and the location of the ground-station, the internal delayofthestationof50^sisdeductedfromthecorresponding value.

The DME gives the slant distance. The flight management system uses the distance informationfrom the DME for position calculations. The distance is also available forindicationin theflightcompartment.

The DME equipment in the aircraft is an interrogator which interrogates the DME ground station.The ground station gives a reply which the interrogator receives. From the time differencebetween interrogation and reply the interrogator calculates the distance. The interrogation andthe reply are on a different frequency. These frequenciesare:

- 1025 to 1150 MHz for the interrogatortransmitter
- 962 to 1213 MHz for the ground stationtransmitter.

The frequency for the ground station transmitter is always 63 MHz above or below theinterrogator frequency (when below and when above depends on the selected channel). The DME frequency has a fixed relation with the collocated VOR, so when you select a VORfrequencyyou automatically select the DMEfrequency.

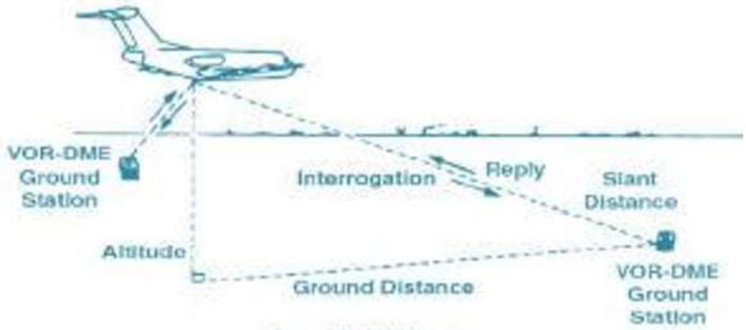

Figure 5.495. Distances

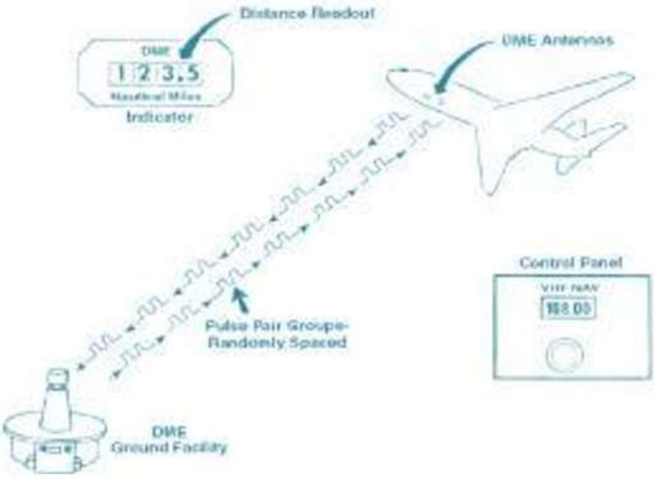

Fig. 2.83 Interrogation and Reply Global Position System (GPS) Introduction

In recent years, satellite navigation systems have revolutionized the concept of instrumentnavigation. Developed as military systems by the United States and the Soviet Union, coupled withthecomputersystemswhichhavedevelopedatthesame

time, they allow much moreaccurate and available position fixing for aircrew. ICAO refers to them as 'global navigation satellite systems' or'GNSS'.

The United State'ssystem, called 'Global PositioningSystem', or GPS, is the most commonlyavailable. However the Soviet, now Russian, 'Glonass' system is alsocommerciallyavailablewithsuitable receiver equipment. Receivers have been produced which can accept signals from both systems, and other countries are considering developing new systems either on their ownorin conjunction withothers

Principles of Operation Basic Principle

Basically, all satellite navigation systems use the same principle as DME. The receiversmeasurethe time it takes for a radio signal to travel from a transmitter in a satellite at a known point in space. Knowing the time, and the speed of propagation of the waves, a distance can becalculatedby the receiver's computer. The receiver then measures the time for a signal from another satellite at a known position to reach it and calculates thatdistance.

The possible positions from the first satellite can be plotted as a sphere, centred on the satellite,whose radius is the calculated distance. The same applies to the distance from the second satellite, and where the two spheres touch provide the possible positions of the receiver. Thetwo spheres touch along a circle in space, as in Figure 5.507.

A third satellite can provide a further sphere. The possible positions lie on the circle joiningspheres1 and 2, that joining 1 and 3, and also that joining 2 and 3. These three circles meet at only two points in space. One of these is so far removed from the earth that the other must bethe correct position of the receiver. The computer in the receiver makes allthese

calculations

and displays the result as a three-dimensional point in space related to fixed features on theearth, commonly the lines of latitude and longitude for horizontal, and the centre of the earth forvertical, reference.

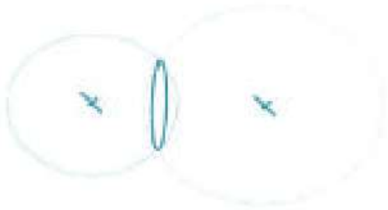

Fig. 2.84 Position spheres

Even with only two satellites providing ranges, an observer at a known altitude could feed thataltitude into his receiver's computer. That altitude is another sphere in space, so where the twospheres from the satellites touch that altitude sphere is his position. There are of course twopossible positions, but if the observer can give his receiver a rough position it will discard theobvious false one. This facility has limited use in aviation, because fortunately there are enoughsatellites to provide sufficient spheres for three-dimensional position fixing over the whole of theearth for most of the time.

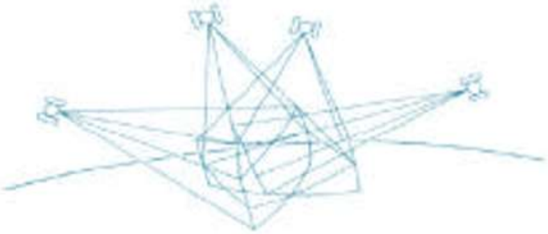

Fig. 2.85 Position fixing

The satellites are supported by ground stations, which receive signals from all the satellites inturnas they pass overhead. The ground stations monitor the signals, andamend the almanac and ephemeris messages transmitted from thesatellites.

Space Segment

The American Global Positioning System (GPS), also called NAVSTAR, uses 24 satellites,whichincludes three or more spares, in orbit at any one time. The satellites 'fly' in six differentorbits, 20,200km (10,900 nm) above the earth's surface, taking 12 hours for each orbit. Theorbitsare inclined at 55° to the earth's spin axis, to give the best combination of good coverage,constantly varying geometry, and ease of orbital insertion. All these satellites transmitnavigationinformation on the same frequencies consecutively, in one of 40 timesegments orPRNs (pseudo-random noise numbers), but each sends a different code at the start of itstransmission. The satellites are usually referred to by the PRN which theyuse.

Control Segment

The control segment consists of the ground stations. The master station does all thecalculations, and the other ground stations provide communications between the satellites andthe master station. The master station with its extremely accurate atomic clock compares eachsatellite's average clock time with its own. It then transmits all the clock errors for re-transmission by every satellite as part of its ephemeris message. The master station can alsotransmit necessary corrections to the satellite's on-board computer.

If any satellite is transmitting false information, or is in the wrong orbit, the master station tellsevery satellite that that particular one is unserviceable. Each satellite's transmissions containinformation about its own and every other's health,clock
corrections, and ephemeris, so theunserviceable will be re- transmitted in that message. However, it may take several orbits forthe unserviceable satellite to fly over the master station after its failure, and the other satellitesalso have to pass over the master for the information to reach them.

User Segment (Aircraft Equipment)

The GPS receiver is a simple device, requiring little more than a small screened aerial mountedon the skin of the aircraft. Hand- held devices are capable of showing position to previously unimagined accuracy. The computers and their associated software are the complex parts ofthe aircraft equipment. Computers can calculate actual track and groundspeed made good, andrequired track and ETA to intended waypoints. Given inputs from flight instruments or an airdata computer, the GPS computers can make all navigational calculations. Data loaded into thecomputer software can display instructions to follow procedures, and direct the aircraft clear ofrestricted airspace.

Area Navigation (RNAV) Introduction

Area navigation (RNAV) is a navigation and guidance system which uses VOR bearing, DMEslant ranging, and barometric altitude, as its basic signal inputs to compute course and distanceto a waypoint. Since the system can only function within the service area of a VOR/DME stationit cannot be used for overseasnavigation.

To fly over uncovered regions like oceans, deserts and unpopulated areas, the input of theinertial reference system and or global positioning system is needed.

The next development step is the Flight Management System, covering also profile (vertical)navigation and engine thrust management.

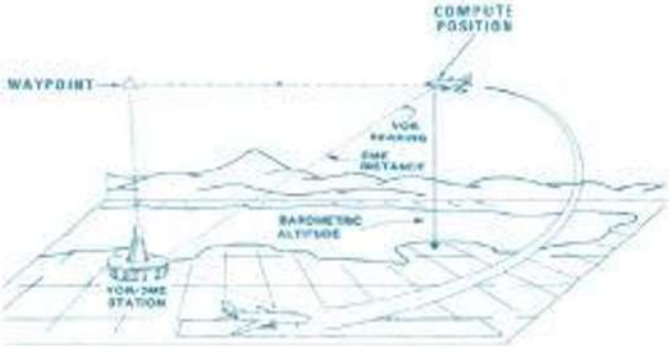

Fig. 2.86RNAV

VOR/DME flight

For example, here is a flight plan between Chicago’s O’Hare airport and Newark. The flight goes from one VOR station to another, until, by a round-about path, we arrive at Newark

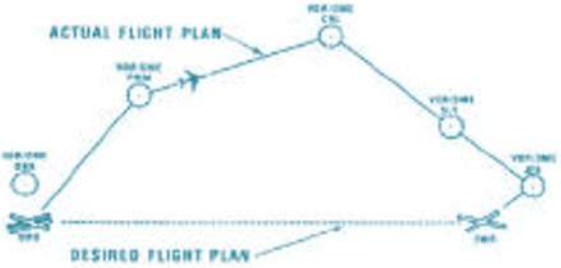

Fig. 2.87 VOR Flight

Using Area Navigation (RNAV)

The area navigation concept provides direct routes between airports. Along each route thereare waypoints towards which the aeroplane flies. The waypoint locations areestablished whenthe route is designed. Each waypoint is associated with a specific NAV aid or VOR/DME station.

Fig. 2.88 RNAV Flight

Flight Management System (FMS) Introduction

The Flight Management System (FMS) compares a pilotselectedflight plan with the actualhorizontaland vertical aircraft position. In case of a difference between the selected flight planandthe aircraft position, the FMS provides a steering and a thrustcommand.

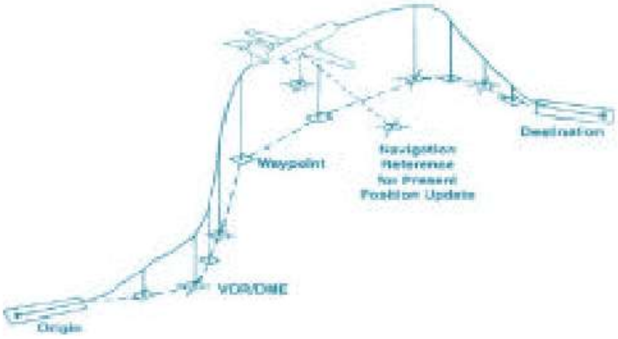

Fig. 2.89 Flight Route

The FMS shows the information about the selected flight plan on the Control Display Unit(CDU). Through the keyboard of the CDU the crew can change the flightplan.

The FMS gives the steering and thrust commands to the AFS. The AFS can use the commandsto fly the aircraft automatically on the flight plan. The AFS can also send the commands to thecrew via the flight director command cues. The FMS also gives information to the EFIS to showthe flight plan on the navigation display.

AFS = Autoflight System (Autopilot/Autothrottle)

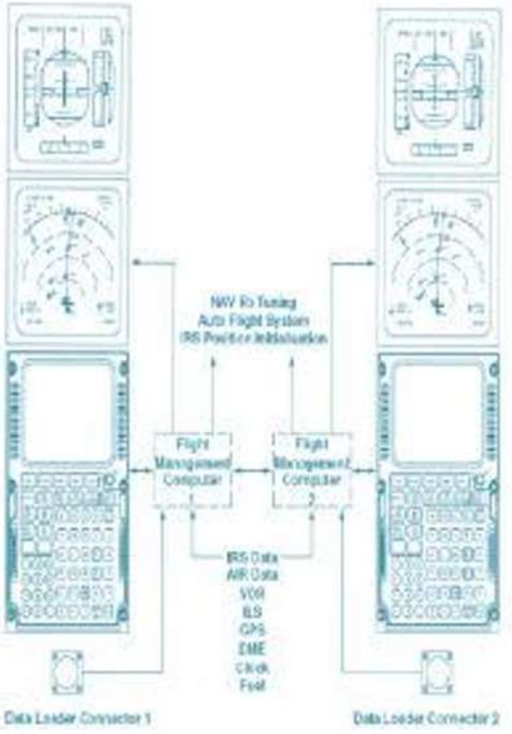

Fig. 2.90FMS Interface

The FMS uses information from various aircraft systems and from a database:

Navigation

The FMS uses information from its database to automatically tune the navaids (ILS, VOR and DME). With these navaids, the FMS measures the aircraft's position, direction, andvelocity.

Performance

The FMS calculates a vertical profile that gives the shortest possible flying time at the lowest fuel consumption. The FMS also can give predictions of fuel quantities and arrival times at future points in the flightplan.

Guidance

The FMS compares the position where the aircraft has to be, according to the flight plan, with the actual aircraft position. If there is a difference, the FMS gives guidance commands to the AFS to bring the aircraft back to the flight plan.

EFIS display

The FMS is the primary source of information for the displays. In the FMS database there is information about flight plans, navaids, aircraft aerodynamics andengine data. The flight plan and navaid data must have an update every 28 days. To start theFMS the crew has to select a flight plan on the CDU. After the selection, the FMS takes theflight plan out of the database and puts it in the flight plan memory for use in that flight. The crew adds Standard Instrument Departures (SID) and Standard Arrival Routes (STAR) whentraffic control gives these procedures and altitudes is the vertical flightplan.

Fig, 2.91 FMS Tasks

AREA Navigation System (RNAV)

The RNAV system is identical to the Flight Management System, containing the lateral(horizontal) navigation part. The VOR/DME stations along the route can be located. The routes and its waypoints are calculated and based on the radio navigation aids.

Example of FMS or RNAV guided flight:

- FMS Position at Airport ReferencePoint
- FMS Position updated by Take Offinitiation
- Dual DME update (p/p) R/I Mode
- VOR/DME update (0/p) R/IMode
- No VOR/DME coverage IMode
- Dual DME update (p/p) R/IMode
- Dual DME and Lateral update by Localizer R/IMode

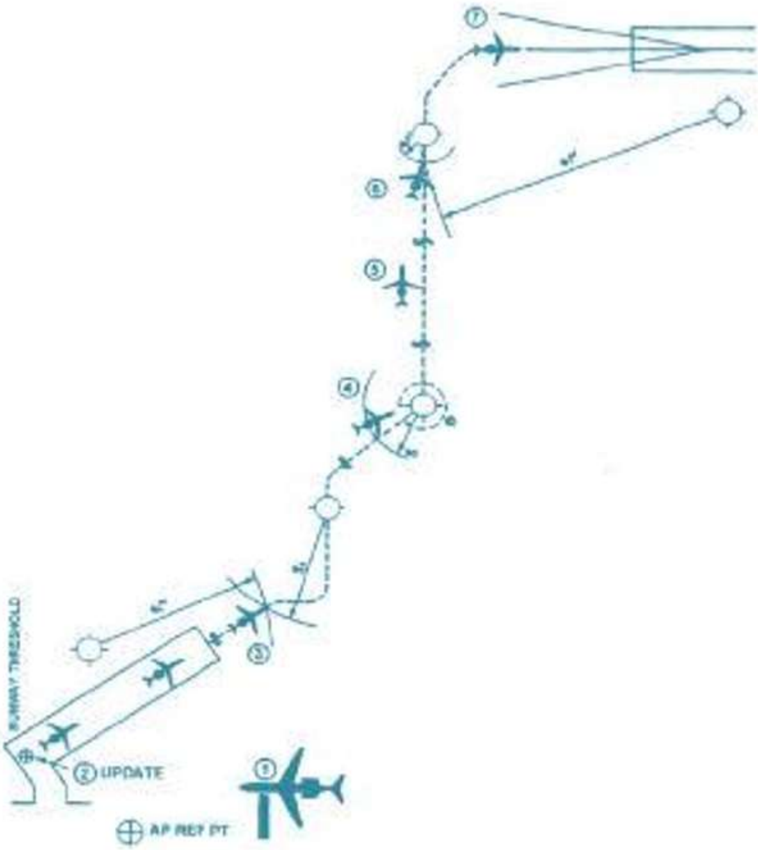

Fig.2.92 FMS or RNAV guided flight Radio Altimeter

Fundamentals

The Radio Altimeter System determines the height of theaircraft above the terrain during initialclimb, approach and landingphases.

The principle of the radio altimeter is to transmit a frequency modulated signal, from the aircraftto the ground, and to receive

the ground reflected signal after a certain delay. The time betweenthe transmission and the reception of the signal is proportional to the aircraft height.

Frequency: 4.3GHz Maximum height: 2,500feet

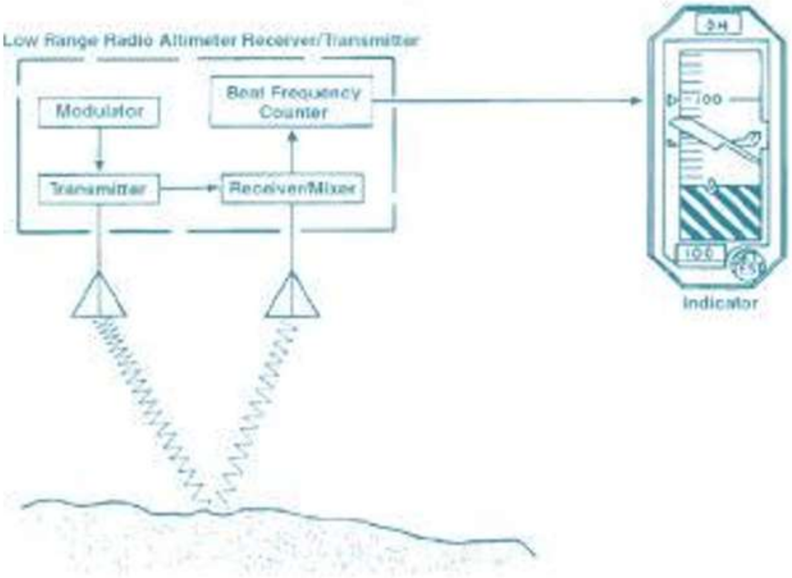

Fig. 2.93 Rad Alt principle

The RA Unit sends the radio altitude to the:

- indicator system (EFIS or conventionalinstruments)
- Flight Data Recorder forinvestigations.
- Flight warn system for altitude call out during approach and failuremonitoring.
- Ground Proximity Warning for pilotalerting.

The automatic flight control system (Autopilot) uses the height for automaticlandings.

ATC Transponder Principle

The Air Traffic Control (ATC) transponder is an integral part of the Air Traffic Control RadarBeaconSystem. Thetransponderis interrogated by radar pulses received from the groundstation. It automatically replies by a series of pulses. These reply pulses are coded to supplyidentificationand automatic altitude reporting of the aircraft on the ground controller's radarscope. These replies enable the controller to distinguish the aircraft and to maintain effectiveground surveillance of the airtraffic.

The ATC transponder also responds to interrogation from aircraft equipped with a TrafficCollisionAvoidanceSystem.

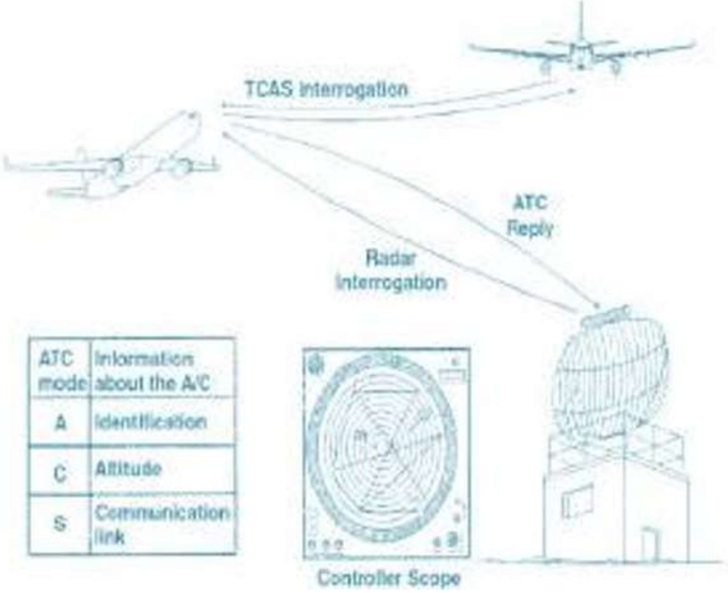

ATC mode	Information about the A/C
A	Identification
C	Altitude
S	Communication link

Fig. 2.94ATC transponder

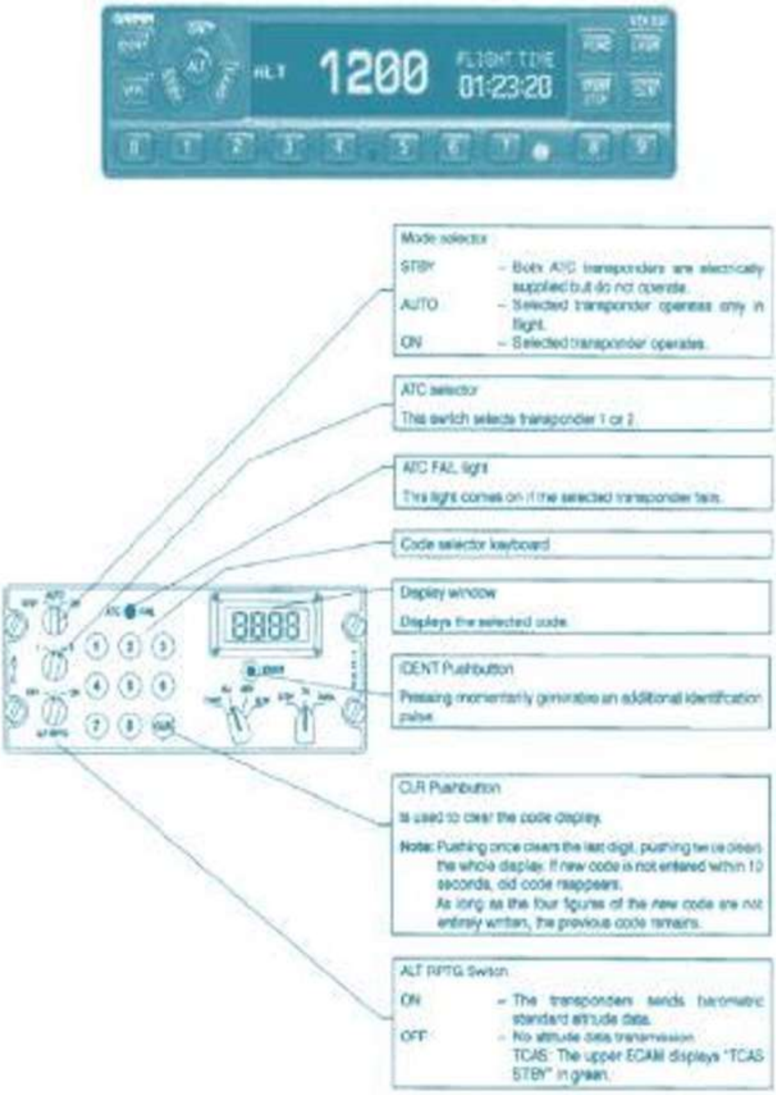

Mode selector
STBY – Both ATC transponders are electrically supplied but do not operate.
AUTO – Selected transponder operates only in flight.
ON – Selected transponder operates.

ATC selector
This switch selects transponder 1 or 2.

ATC FAIL light
This light comes on if the selected transponder fails.

Code selector keyboard

Display window
Displays the selected code.

IDENT Pushbutton
Pressing momentarily generates an additional identification pulse.

CLR Pushbutton
Is used to clear the code display.
Note: Pushing once clears the last digit, pushing twice clears the whole display. If new code is not entered within 10 seconds, old code reappears.
As long as the four figures of the *new* code are not entirely written, the previous code remains.

ALT RPTG Switch
ON – The transponders sends barometric standard altitude data.
OFF – No altitude data transmission.
TCAS: The upper ECAM displays "TCAS STBY" in green.

Fig. 2.95 Transponder control

Primary and Secondary Surveillance Radar(PSR/SSR)

The air traffic control radar beacon system (ATCRBS) consists of airborne and ground basedequipmentthat operate together to locate and identify the aircraft operating in the system's airspace. The airborne equipment consists of a transponder (receiver-transmitter), a controlunit, and an antenna. The ground basedequipment consists of a primary surveillance radar(PSR) system and a secondary surveillance radar (SSR) system. The PSR consists of anantenna, a receiver-transmitter, and an indicator. The SSR system consists of an antenna, a receiver-transmitter and interface and control equipment used by the air trafficcontroller.

The PSR provides the bearing and range of the aircraft within the airspace. The SSR systemprovides the altitude and identification information of the aircraft within the airspace. Theprimaryradar system uses a narrow RF beam, transmitted through a rotating antenna toilluminateaircraft in the path of the beam. By calculating the elapsed time between transmissiorofthe RF beam and reception of the reflected RE beam, the distance to an aircraft isdetermined. By noting the bearing angle of the antenna, when reception occurs, the bearingtotheaircraft isdetermined.

The secondary surveillance radar (SSR) system interrogates the aircraft about its identity andaltitudeby transmitting two sets of pulses. The interrogation mode is determined by the P1- P3interrogation pulsespacing.

There are two modes of interrogation used. Mode A is for the basic ATC identity interrogationand Mode C is for requesting the transmission of digitally coded altitude information. The ModeA pulses are spaced 8 microseconds apart andinterrogate the aircraft transponder about theidentity of the aircraft. The Mode C pulses are spaced 21 microseconds apart and interrogatethe aircraft transponder about the altitude of the aircraft. The pulses in both modes are identical except for the spacing of the pulses. There are also two alternate modes for interrogating theaircrafttransponder. These optional modes are Mode B and ModeD.

Fig.2.96 Surveillance Radar Antenna (Primary with secondary)

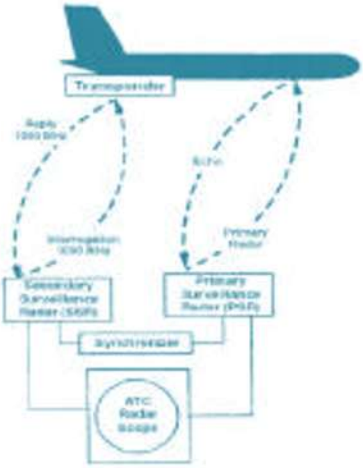

Fig. 2.97 PSR with SSR Principle

Despite being superseded by ACAS II for international air transport operations, ACAS Iequipment is simpler and cheaper to install, and provides TAs which a pilot can use to direct his eyes towards a possible threat. This has been realised as a distinct benefit to aircraft operatingunder Visual Flight Rules. Helicopters especially have a technical difficulty in using TCAS IIequipment, and lightweight ACAS I systems have been developed to warn pilots of approachingaircraft. Figure 5.549 shows the display of a system which satisfies the requirements oftransponding aircraft in three dimensions. While tracking the transponding aircraft it calculatesnot only the range and relative altitude, but also the rate of change of both. The processor can then calculate the time to, and the separation at, the closest point between the two aircraft. Ifthe closest point is likely to be within a certain distance, it generates a TA to advise the crew of an aircraft of that fact. It will ignore signals from aircraft outside 10000 ft of its ownaltitude.

Weather Radar General

The Airborne Weather Radar System (WXR) allows the detection and display of severe weatherareas. The WXR helps the pilot to avoid these areas and the associated turbulences by determining their range and bearing. It also provides a ground mapping.

The radar emits microwave pulses through a directive antenna which picks up the returnsignals. The range is determined by the time taken for the echo to return. The azimuth is given by the antenna position when the echo isreceived.

Frequency: Microwaves 9.4 GHz

Pulse power: 125 Watt - 65 kW 180 - 400 pulses per second

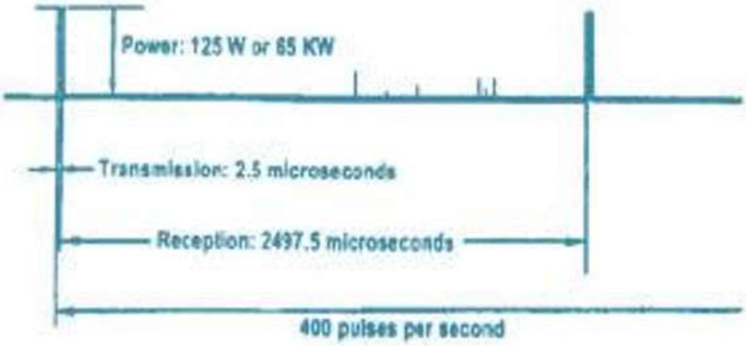

Fig. 2.98Tx with Rx Pulses

Observe the safety precaution if you operate the radar!

The high energy radio waves are dangerous for human bodies and may igniteinflammableliquids!

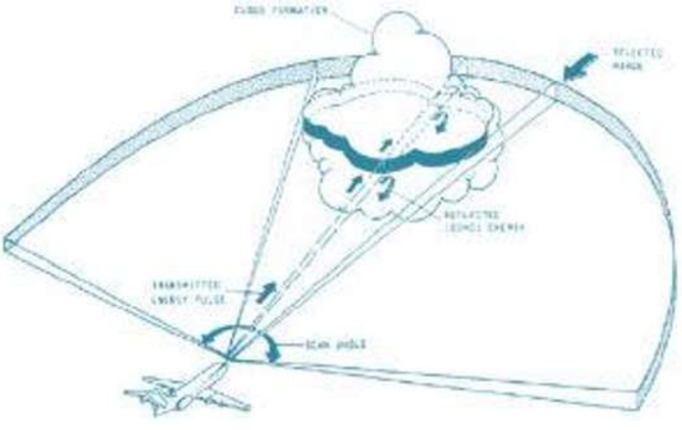

Fig. 2.99 Radar scanning a Cloud

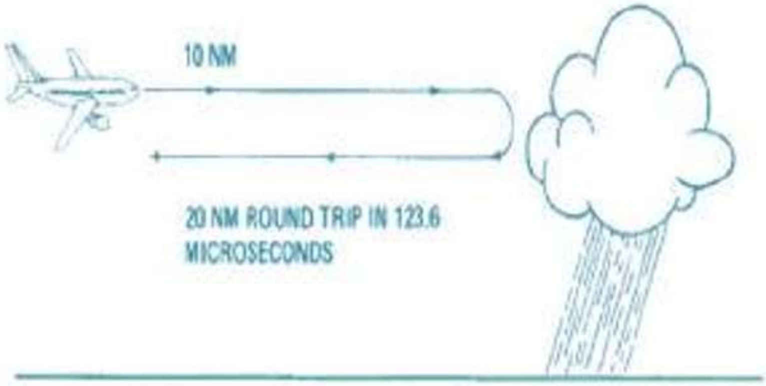

Fig. 2.100 Transmission and echo

Colour	Rainfall
Green	1 to 4 mm/hr
Yellow	4 to 12 mm/hr
Red	> 12 mm/hr
Magenta	Turbulence area

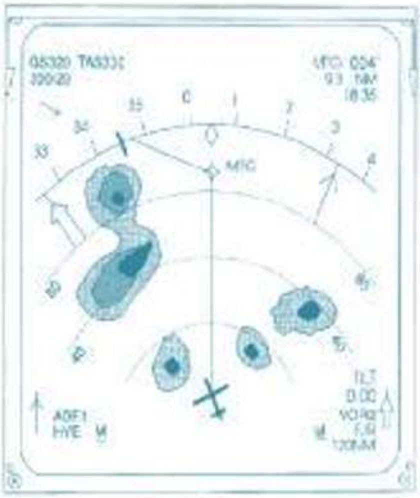

Fig. 2.101 Weather radar indication

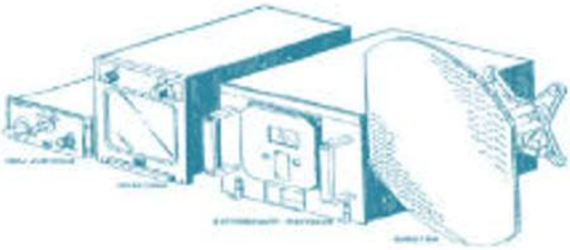

Fig. 2.102Components

How Radar detects Turbulences andWindshear

Conventional Radar: The transmitter emits a pulse which uses only the reflectivity of rainfall (droplets of precipitation) to return an echo to the receiver..

Turbulence Detection

Pulse waveforms show that the echo frequency differs from that oftransmitted pulse. Caused by the Doppler Effect, the resulting frequency shift representsturbulencewhich imparted motion to the droplets. The receivedradar signal actually shifts overa spectrum of frequencies; the broader the band, the greater is the turbulence. When thespectrumexceeds a threshold defined moderate to heavy, the return is displayed on the screenas turbulence (a magenta-colouredarea). That threshold occurs when droplets move at the rate of 5 meters persecond

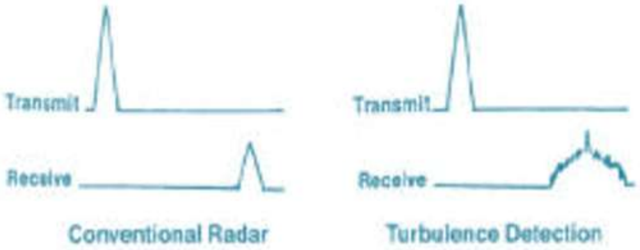

Fig. 2.103 Pulses

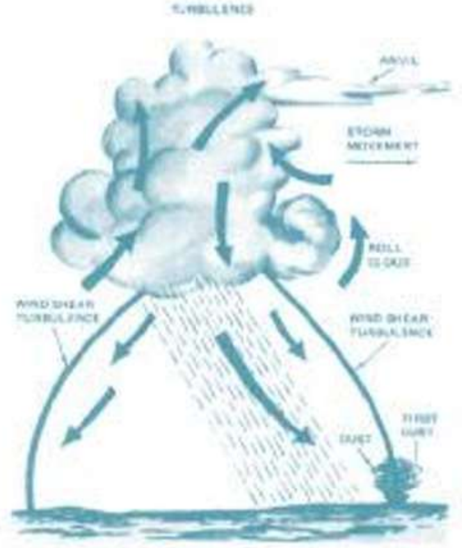

Fig. 2.104 The storm system Antenna

The weather radar uses a narrow beam transmitted and received toward determined direction.The azimuth dive scans the space ahead the aircraft for clouds, thunderstorm, hail and terrestrial obstacles. Elevation, tilt, and roll drives compensate for the aircraft movements toobtaina stable weather radar image on thedisplays.

Parabolic Antennas

On older models using parabolic antennas the RF of 9,375 GHz (about 65 kW power) issupplied via wave-guideand feeder toward the parabolic reflector. From there a narrow beam isdirectedinto the space. The spoiler deflects the radio waves toward the ground forgroundmapping.

The Parabolic Reflector works on a similar principle to a car

headlight reflector. Energy strikingthe reflector from a point- source situated at the focus will produce a plane waveform in a direction parallel to the axis to the parabola.

The feed is usually a dipole with a parasitic element. The consequence of a dipole feed is thatthe beam will have a main lobe and smaller side-lobes, which usually mean much higher powers are associated with these antennae than with the flat plate types.

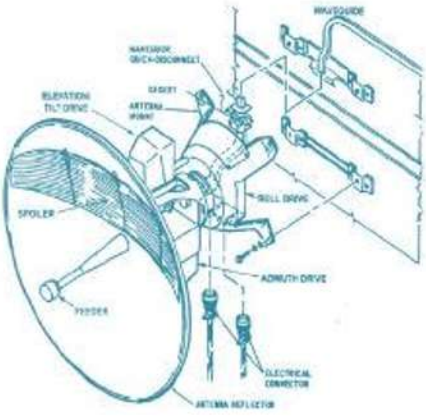

Fig. 2.105Parabolic antenna components

Fig. 2.106Antenna pattern

MODULE 11.6: ELECTRICAL POWER (ATA 24)

AIRCRAFT ELECTRICAL POWER INTRODUCTION

There are two types of electrical system used in aircraft; one is alternating current (AC) system or DC system. AC is constantly changing in value and polarity, or as the name implies, alternating. Figure -1 shows a graphic comparison of DC and AC. The polarity of DC never changes, and the polarity and voltage constantly change in AC. It should also be noted that the AC cycle repeats at given intervals. With AC, both voltage and current start at zero, increase, reach a peak, then decrease and reverse polarity. If one is to graph this concept, it becomes easy to see the alternating wave form. This wave form is typically referred to as a sinewave.

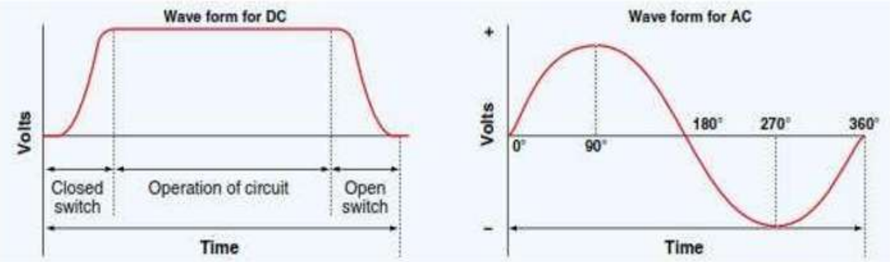

Figure-1. DC and AC voltage curves.

Alternating current (AC) electrical systems are found on most multi-engine, high performance turbine powered aircraft and transport category aircraft. Large aircraft systems generally use 115V and 200V Alternating Current (AC). The frequency of the AC power is held constant at 400 Hz (±5%). Direct current (DC is used on systems that must be compatible with battery power, such as on light aircraft. This is particularly the case with those systems which are required to work when the engines (and hence the AC generators) are shutdown, and work from the power supplied from the battery. Some instrument systems use 26V AC.

There are many benefits of AC power when selected over DC power for aircraft electrical systems. Since more and more units are being operated electrically in airplanes, the power requirements are such that a number of advantages can be realized by using AC (especially with large transport category aircraft). Space and weight can be saved since AC devices, especially motors, are smaller and simpler than DC devices. In most AC motors, no brushes are required, and they require less maintenance than DC motors. Circuit breakers operate satisfactorily under loads at high altitudes in an AC system, whereas arcing is so excessive on DC systems that circuit breakers must be replaced frequently. Finally, most airplanes using a 24-volt DC system have special equipment that requires a certain amount of 400 cycle AC current. For these aircraft, a unit called an inverter is used to change DC to AC. Alternating Current (AC) can be converted to DC using a device called a Transformer Rectifier Unit(TRU).

GENERATOR

Energy for the operation of most electrical operated equipment in an aircraft is supplied by a generator which are of two types.

1. D.C.Generator
2. A.C. Generator(Alternator)